Rail to Sleeper Fastening Systems

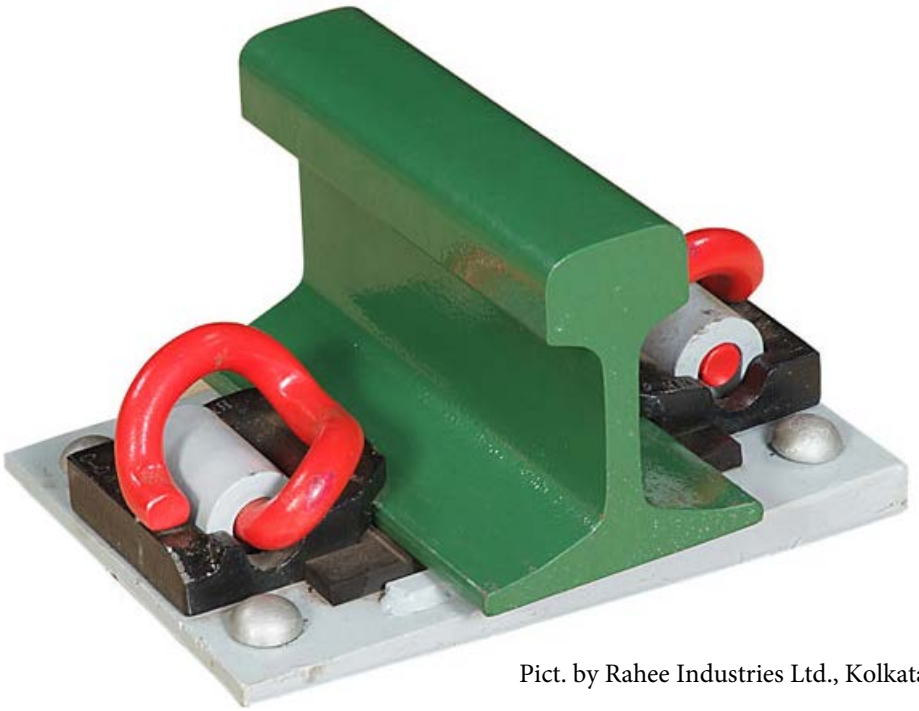

Pict. by Rahee Industries Ltd., Kolkata

Steel Bridge-Assembly with Mark-III ERC Clip, RDSO T-3701; a left-handed Version with an anti clock-wise spatial Bend derived from Pandrol PR 401 Series Clips

It has become common practise in India to call in case of a right-handed Version the Middle-Part between first and second Arch of an ERC **"HEEL"** and the End-Part **"TOE",** and in case of a left-handed Version to call the same Middle-Part "**TOE"** and the same End-Part **"HEEL"**.

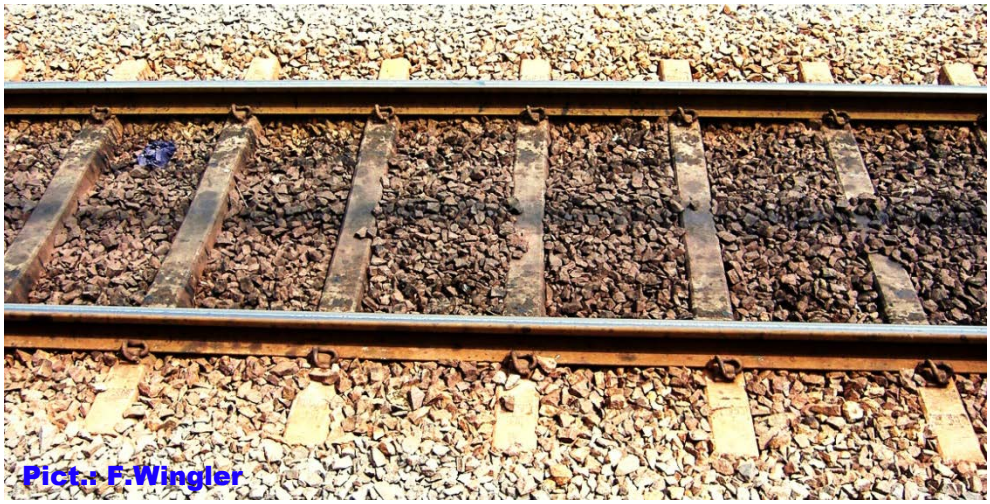

Mark-III Assembly with the Clip Middle-Part clamped on the Liner of the Rail-Foot and with the Clip End-Part on the Shoulder-Insert Plate; Belgaum-Londa, Karnataka

---

Revised and amended by Dr. F.A. Wingler, AUGUST, 2016

PREFACE ; by F.A. Wingler

Geometry and Designation of self tensioning Pandrol-Type Elastic Rail Clips (ERC)

The worldwide commonly used Pandrol e-Brand Clips are of a socalled ***"right-handed"*** design: The first arch after the centre-leg takes a clock-wise bend to the rigtht side. When inserted from right to left into the tunnel of the shoulder-plate the middle part of the the spatial bended steel-rod comes on the shoulder plate and the end part comes on the liner/rail-foot. By tradition the middle part resting on the shoulder plate is named ***"HEEL***" and the end part clamping the liner/rail-foot is named ***"TOE"***. By tradition the clamping force is called ***"TOE-LOAD"*** although is is actually a **"Clamping Force" or "Hold-Down-Force"** and not a **"Load".** A **"Load"** is generated by a **"Mass".** The Clamping Force of an ERC is generated by the deflection of the elastic steel clip-rod measured in [kN] and not by a Load. This means, to mesure the Toe-Load in [kg] or [metric tonnes] is nowadays incorrect:

"Right-handed" Pandrol e-Brand Clip; Pict. by Pandrol

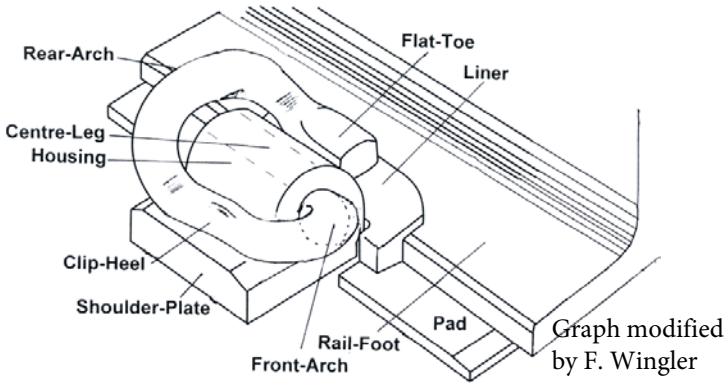

Assembly of "right-handed" Clip (Pandrol e-Brand; Logwell-G)

The Indian ERC is originated from the socalled ***"left-handed"*** Pandrol PR 401 Clip keeping the first arch lower and the second arch higher. The first arch after the centre-leg takes an anti clock-wise bend to the left side. When inserted from right to left into the tunnel of the shoulder-plate the middle part of the the spatial bended steel-rod comes on the liner/rail-foot and the end part comes on the shoulder plate. But since the Indian Track Men are used to call the force, which clamps the liner/rail-foot, "***Toe Load"*** , they name the middle part of their left-handed clips a ***"TOE"*** and not as with the right-handed Pandrol e-Brand clips ***"HEEL"***:

Indian Mark-III "lefthanded" ERC

Pict. by F. Wingler

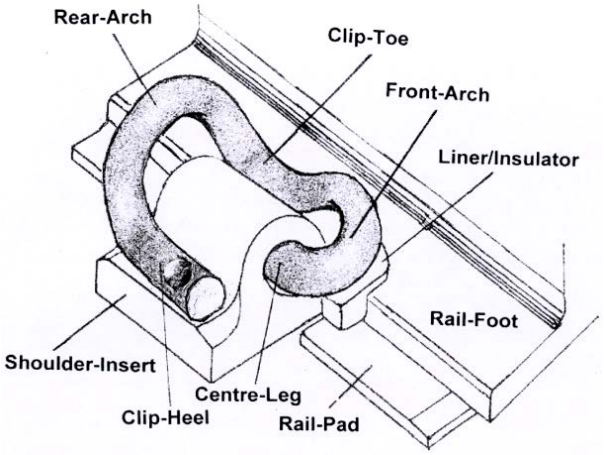

Assembly of "left-handed" ERC

Graph by F. Wingler

The designation of the Indian ERC clip-parts is not defined by the geometry-structure but governed by the application with what clip-part clamps the rail. This creates sometimes confusion and is unusual in the scientific technical world.

Chapter 5

Rail to Sleeper Fastening Systems

5.1 CONVENTIONAL FASTENING SYSTEMS FOR WOODEN SLEEPERS

The conventional fastenings of Indian Railways for wooden sleepers are divided into the following three main systems:

1. Direct laying and direct fastening.
2. Indirect laying and direct fastening.
3. Indirect laying and indirect fastenings.

5.1.1 Direct Laying and direct Fastening Systems

In this system **(Fig. 5.1**) the rail is laid and fixed on the sleeper directly with spikes, screws or bolts. No bearing-plate is used between the rail and the sleeper. The low costs are the main advantages. Its disadvantages are:

(a) In the absence of a bearing-plate there is abrasion between the rail-foot and the sleeper, the rail tends to cut into the sleeper.

(b) The vertical load on the rail is directly transmitted to the sleeper only over the area covered by the rail-foot. The compressive forces on the sleeper are therefore relatively high causing crushing of wood particles underneath

(c) The lateral forces are directly transmitted to the fastening, which they are unable to resist for a long period, thus affecting the track gauge.

Indian Railways has adopted direct laying and direct fastening systems with hardwood (U) sleepers only on plain tracks (not on points and crossings). Direct fastening of rail to sleeper is accomplished either with dog-spikes or rail-screws:

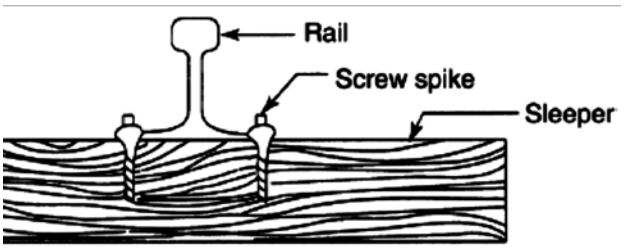

Fig. 5.1: Direct Fastening for Turnout

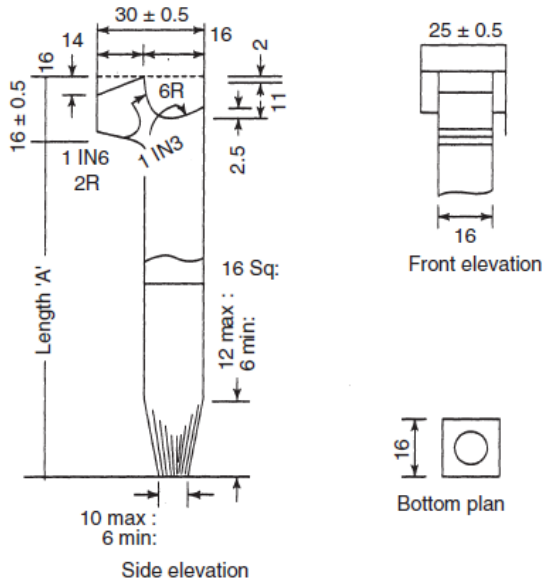

Fig. 5.2: Dog-Spike Dimensions

- **Dog-Spikes:**

  Fig. 5.2 above shows the broad dimensions of the dog-spike used by Indian Railways. On the spike's head, lugs are provided for extraction. It is on account of this shape that the spike is known as ***"Dog-Spike"***. The head and point of all sizes of dog-spikes are identical, and the shank is a uniform 16 mm square section. The length under the head varies to suit sleepers with or without bearing-plates for various gauges, viz. broad, metre and narrow.

To nail a dog-spike into a sleeper, a hole is bored with augers right through the sleeper. Hole sizes of 16 mm for hardwood **(U)**-sleeper and 14 mm for softwood **(T)**-sleepers have been standardized for Indian Railways.

The wave-motion of the rail under traffic pulls up the spikes slightly. If there is no prising up of the head by more than 3 mm, the spike is not to be driven back, because the frequent hammering of a spike loosens its grip. When the spike becomes too loose, it is pulled out, the hole is plugged with a wooden plug, another hole is bored and the spike is re-driven.

Wooden sleepers hardly exist anymore on INR tracks. One can find a margin left on some MG and NG tracks. Due to the large deforestation India and environmental issues and awareness new wooden sleepers are banned in India.

In North America and Canada the ecological awareness is less progressive than in India, since timber production and consumption are in balance. Therefore the use of Timber is of a minor ecological issue. And where timber for cross-ties is still available (especially in the North-West), there are thousands of heavy-haul kilometres for axle loads of up to 31 t on wooden sleepers, mostly with bearing plates providing the rail-cant and with dog-spikes, called in USA ***"Cut-Spikes"***. **Fig. 5.3, 5.4** and **5.5** shows the standard track system used in USA, Canada, Mexico, Australia and as well in Sri Lanka. For CWR tracks in USA plenty of anchors are fixed against creep. In England elastic spikes are in use for direct Fastening on wooden Sleepers; **Fig. 5.5.** Wooden sleepers provide an inherent elasticity and are by far friendlier to the ballast stones than inelastic concrete sleepers. In USA the conversion of wooden sleeper heavy-haul tracks to concrete sleeper tracks goes along with a lavish strengthening of the formation (sub-grade/sub-soil).

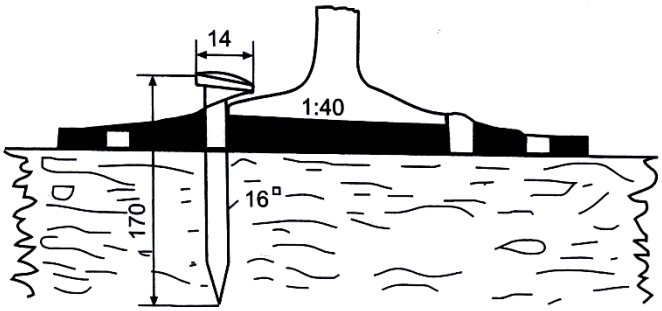

Fig. 5.3: Standard USA canted Track Bearing Plate with Rail-Seat for spiked wooden Sleepers (Fig. from B. Lichtberger, ***Track Compendium***)

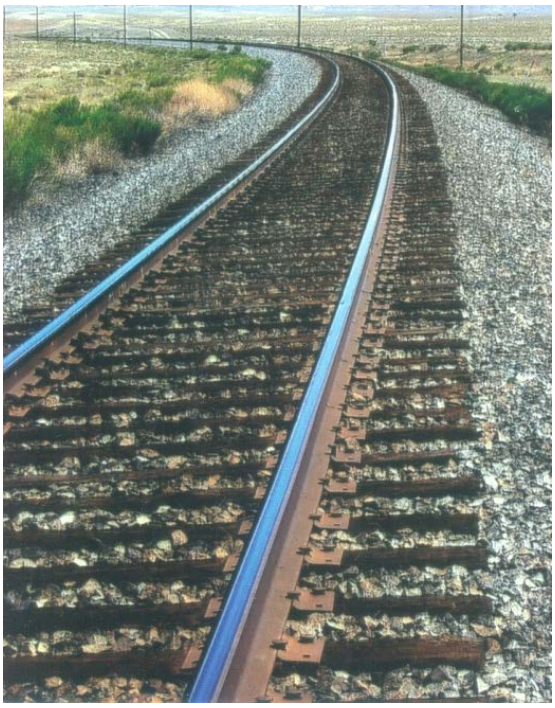

Fig. 5.4: CWR Track in USA on Sleepers with "Cut-Spikes" and Rail Anchors

Fig. 5.5: LWR Track in England on wooden Sleepers with elastic Spikes

Pict. by F. Wingler

- **Rail-Screws**

Fig. 5.6 shows the broad dimensions of a rail-screw used by Indian Railways. With the rail-screws the rails are fastened onto the sleepers. They are an alternative to dog-spikes. Rail-screws are more effective, and the pull-out resistance is almost double to that of dog-spikes. The head and the point of all sizes of rail-screws are identical, and the shank is of uniform 22 mm diameter. The overall length under the head and the length of the unthreaded portion are varied to suit sleepers with or without bearing-plates for various gauges. The rail-screw is provided with greater head-width, and under its head with a sloped surface to get a better hold on the rail. Indian Railways prefer rail-screws over dog-spikes because of the firmer grip.

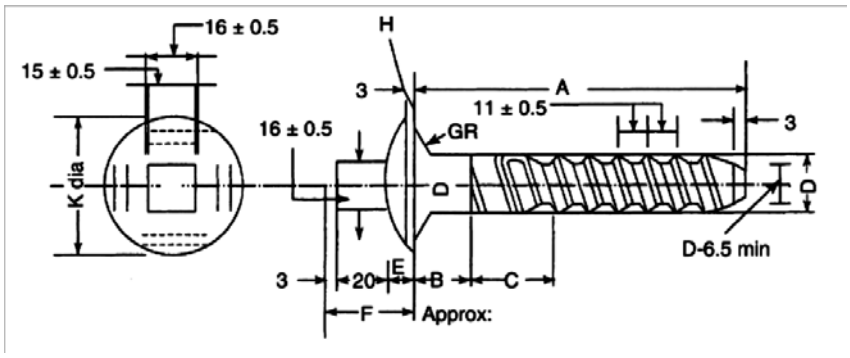

Fig. 5.6: Dimensions of Rail-Screw

5.1.2 Indirect Laying and direct Fastening

This common fastening fixes the bearing-plate to the sleeper body and the rail to the bearing-plate; **Fig. 5.7**. The bearing-plate, whether of cast iron or steel, serves to distribute the load of the rail over a larger area of the sleeper. This limits the compressive-stress on the sleeper. The bearing-plate is essential for softwood (T)-sleepers and advantageous for hardwood (U)-sleepers:

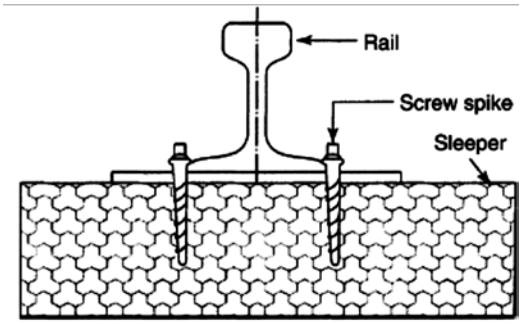

Fig. 5.7: Flat MS Bearing Plate on Turnout

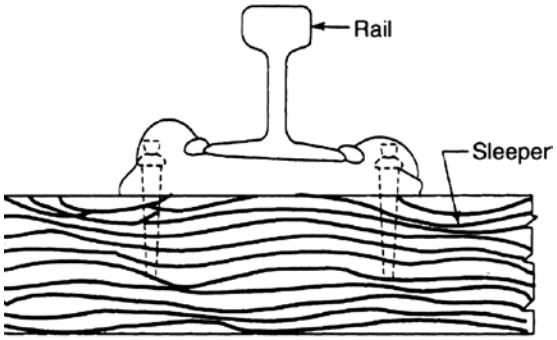

Fig. 5.8: Anti Creep Bearing Plate

Because of the friction between the bearing-plate and the sleeper the lateral forces on the spikes are reduced. This improves the gauge retention of the sleeper.

5.1.3 Indirect Laying and indirect Fastening Systems

The bearing-plate is fastened to the sleeper with plate screws and round spikes, but the rail is fixed to the bearing-plate with two-way keys; **Fig 5.8, above**. With this arrangement the rail grip is not affected by the wave action of the rail. It is therefore an effective anti-creep fastening. The lateral forces coming on to the spike are less, thereby improving the gauge holding capacity.

Cast iron anti-creep bearing-plates used with this system are (a) one-key bearing-plates and (b) two-key bearing-plates.

One-key anti-creep bearing-plates have a single two-way key provided on the gauge side jaw only. On pre-bored sleepers these plates do not permit any gauge adjustment. As railways experienced difficulties in obtaining chaired sleeper true to gauge, designs of two-key bearing-plates were evolved, which allow adjustment in gauge.

In two-key bearing-plates, plate-screws are used for fastening the bearing-plates to the sleeper. Two-way keys are employed to fix the rails to the bearing-plates.

- **Plate-Screws:**

The broad features of the plate-screws used by Indian Railways are given in **Fig. 5.9.** Plate-screws are now extensively used with all types of bearing-plates to fasten the bearing-plates to the wooden sleepers. Head and point of all sizes of plate-screws are identical, and the shank is uniformly of 20 mm diameter. The overall length under head is varied to suit the thickness of wooden sleepers:

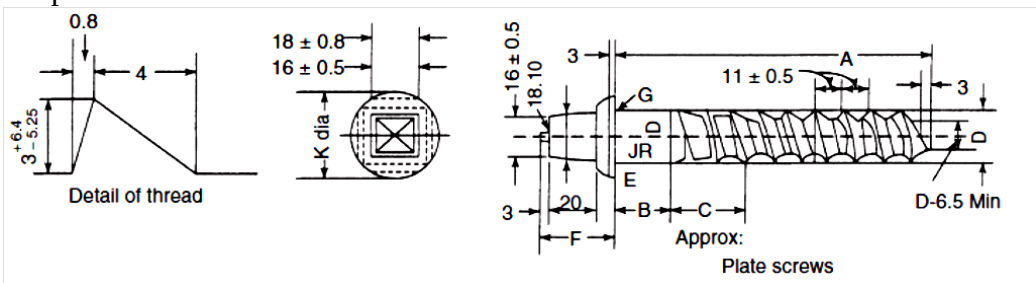

Fig. 5.9: Dimensions of Plate-Screw

- **Two-Way Keys:**

Indian Railways use the two-way keys with various rail-to-sleeper fastening assemblies for an effective rail grip. The dimensions and the taper have been adjusted to suit cast iron bearing-plates, cast iron sleepers and steel sleepers alike. Their two-way features enables them to be used both as left-handed or right-handed keys depending upon the direction of creep.

Three sections have been designed for Indian Railways: For 52 kg/90R/75R rails, for 60/50 R rails and oversize two-way keys for 52 kg/90R/75R rails. The horizontal taper in all the designs is 1 in 32. When the normal size keys are not held in position on account of excessive wear at the key bearing surfaces, oversized keys are required.

- **Numbers of Spikes or Screws required:**

The number of spikes or screws required per rail-seat with or without bearing-plates are in India as follows:

1. All joint-sleepers, bridge timbers, turnout timbers and ash pit timbers: Four spikes.
2. Intermediate-sleepers, on curves, Group 'A', 'B', 'C' and 'D' lines; on BG and MG trunk-lines: Two spikes outside and one inside.
3. Intermediate-sleepers on other lines: One spike inside and one outside. These should be provided as per the arrangement shown in **Fig. 5.10:**

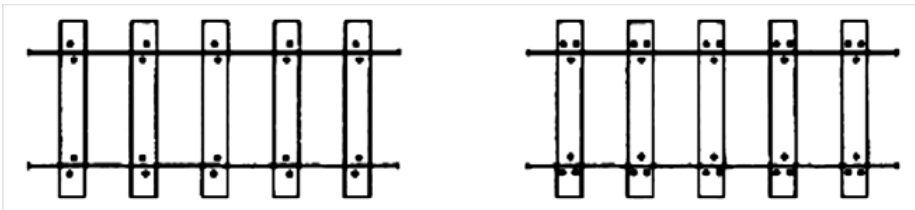

Fig. 5.10: Two and three Spike Rail-Seat Arrangements in India

5.1.4 Indirect Fastenings of other Railways for Wooden, Steel, Concrete Sleepers as well for Ballast-less Slab and Plinth Tracks; K-Ribbed Bearing Plate Assemblies; see also ANNEXURE

On the European and North Asian Continent there are lengthy kilometres of Tracks with wooden Sleepers, mostly CWR tracks, using indirect Fastenings. The timber comes mostly from local production being ecological in balance. In Switzerland approximately 30 % of the rails are laid on wooden sleepers and approx. 25 % on Steel-Sleepers.

The bearing plate providing the rail-cant is attached to the wooden sleeper by four plate screws. A pad is placed between rail-foot and bearing plate. The rail is fastened by two hook-bolts anchored in the bearing plate shoulder, each equipped with a rigid clip, spring washer and nut. There is no need for separate anchors to keep the rail creep under control. The rigid clip provides a relatively stiff attachment. This German ***"K-Fastening"*** with a Ribbed Bearing-Plate and T-head bolt is a common fastening system around the globe adopted by many railways, extensively in continental European and as well in Asian countries. They are in use also in Australia.

K-assemblies are also used on concrete sleepers; **Fig. 5.11, 5.12, 5.13** and **5.14.**

The torque of the nuts for the rigid clip is adjusted with a wrench between 180 and 250 Nm so that the spring-washers are tight with nearly no remaining elastic play; see **Fig. 5.62** and Force-Deflection Diagram **Fig. 5.63 below**. Where more elasticity is needed (especially on concrete sleepers), the rigid clip is replaced by an elastic Vossloh Tension-Clamp (SKL-12), using the same kind of ribbed bearing-plate and hook bolt; **Fig. 5.13a** and **Fig. 5.13b;** see also **Paragraph 5.5** below and **Paragraph 16.1.5** and **Fig. 16.2a/b;** as well **ANNEXURE**.

Pandrol has developed an elastic Clip-Fastening ***"K-Lock"*** to be inserted instead of the hook-bolt in order to provide more elasticity on existing K-ribbed bearing-plates; **Fig. 5.14.** This assembly is used on wooden sleepers in Serbia and Montenegro.

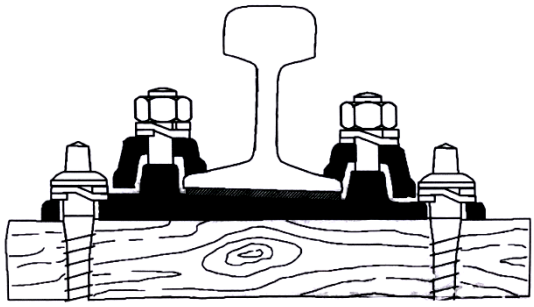

Fig. 5.11: K-Ribbed Bearing-Plate with Rigid K-Fastening on wooden Sleepers or Concrete Sleepers (Fig. from B.B. Lichtberger, ***Track Compendium)***

Fig. 5.12: 140 kmph CWR on wooden Sleepers with rigid K-Fastening, Germany
Pict. by F. Wingler

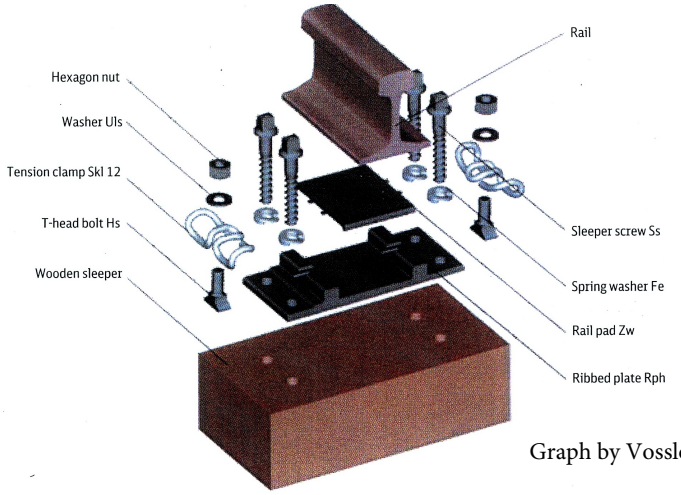

Graph by Vossloh

Fig. 5.13a: Elastic K-Ribbed Bearing-Plate Assembly with Vossloh Tension-Clamp SKL 12

Fig. 5.13b: Vossloh Tension-Clamp SKL 12 for Elastic Fastening on K- Ribbed Plate
Pict. by Gleisbau

Fig. 5.14: Elastic Pandrol K-Lock Clip with Insulator for K-Ribbed Plate; Serbia
Pict. by Pandrol

The main feature of the indirect K-Fastenings are a canted Base-Plate ***("Ribbed-Plate")*** with two Ribs/Shoulders and a 22 mm diameter hook-bolt with a 32 mm diameter spherical foot housed in the corresponding Swallow-Tail opening of the Base-Plate ***("Ribbed-Plate").*** After inserting the hook-bolt in the shoulder either a rigid clip or an elastic Vossloh tension clamp SKL 12 is slipped over securing the bolt-foot in the housing. Next comes a spring-washer and a nut. To adjust the clamping force a torque of 180 to 250 Nm is applied with a wrench; **Fig. 5.15**. The fastening with the K Bearing-Plate ***("Ribbed-Plate"***) is still a worldwide universal applied indirect fastening on wooden, steel and concrete sleepers as well on slab and plinth ballast-less tracks. With an elastic pad the Ribbed-Plate is a predominant indirect fastening for turnouts/switches on ballast-less/slab tracks:

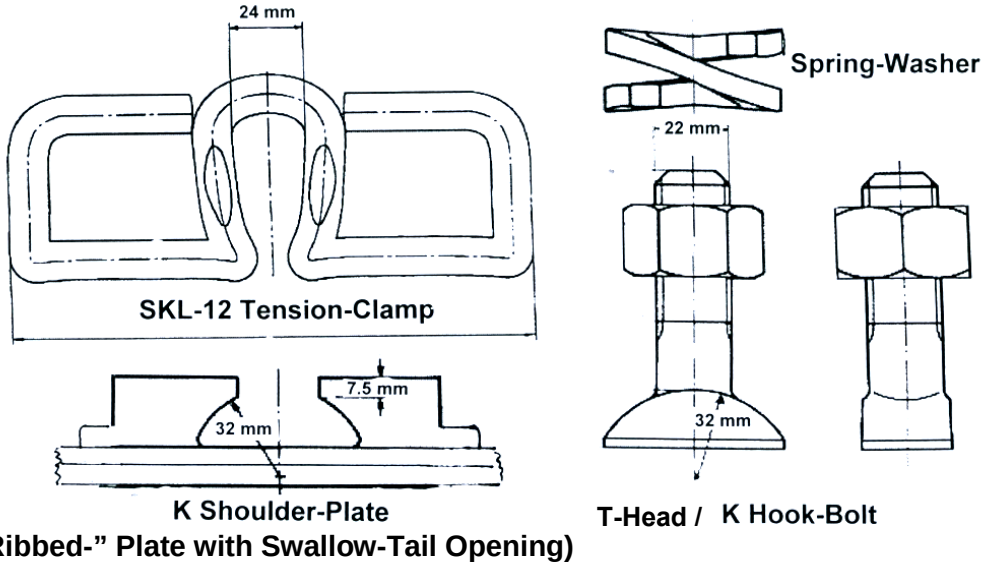

Fig. 5.15: Components of indirect elastic Rail-Fastening with K Bearing ("Ribbed")-Plate, K Hook-Bolt, Spring-Washer and Vossloh SKL 12 Tension Clamp ("Spann-Klemme")

The K-Plate ***("Rippen-Platte/Ribbed-Plate"***) with the Hook-Bolt and the SKL 12 Tension Clamp ***("Spann-Klemme"***) on an elastic pad has reached also India for indirect Rail Fastening on Metro Tracks; **Fig. 5.16;** see also **Paragraph 16.1.5 and Fig. 16.2a/b:**

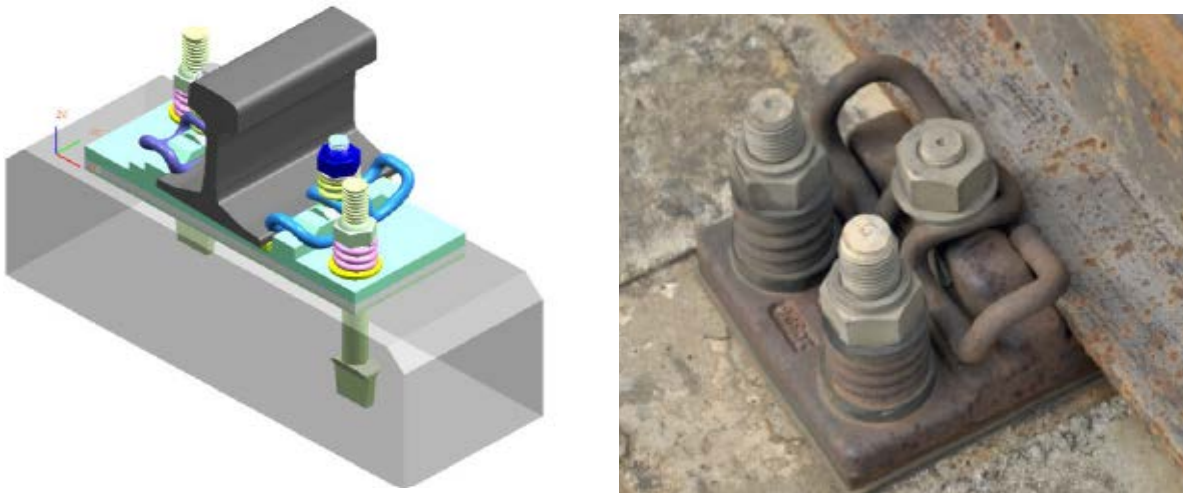

Pict: Vol.-II of NATIONAL TECHNICAL SEMINAR of IPWE; January 11th&12th, 2013, Chennai

Fig. 5.16: Vossloh Assembly with K Ribbed-Plate, K-Bolt and elastic Tension Clamp SKL 12 on Indian Ballast-less Metro Tracks

5.2 CONVENTIONAL INDIAN FASTENING SYSTEMS FOR STEEL TROUGH-SLEEPERS

Fig. 5.17 indicates the general arrangement for rail to sleeper fastenings on steel trough-sleepers. Spring steel loose-jaws and two-way keys are used. To hold the jaws, the steel sleepers are

provided with round holes. The jaws are positioned in the holes to provide necessary vertical and lateral support to the rail-foot with the help of the two-way keys.

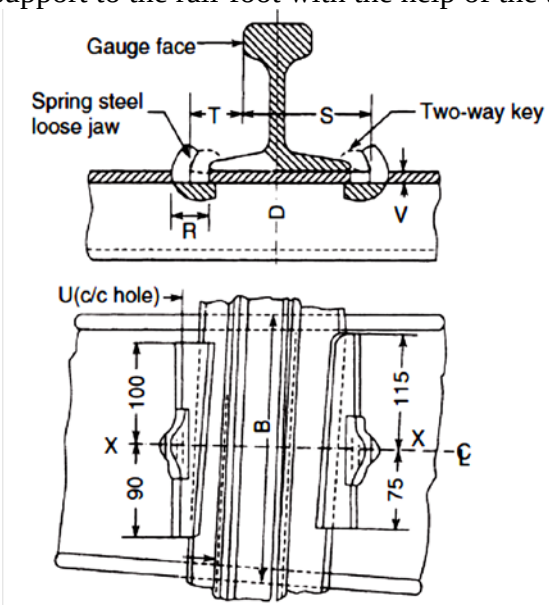

Pict. by F. Wingler

Fig. 5.17: Left - BG and NG Steel Trough-Sleeper Fastening; right – Loose Jaw

With the passage of time, spring steel loose jaws open up, and the sleeper holes get elongated, thus loosening their grip on the keys. Consequently, keys fall out leaving the rail free. Such a situation can be remedied either singly or in combination by any of the following four methods:

1. **Use of over-size Keys**: When normal keys start working loose, the use of oversize keys is helpful, particularly when the looseness is on account of opening of jaws.
2. **Use of Steel-Liners**: These steel-liners, which are made from plain steel sheets, are so formed as to fill in the space formed by the elongation of holes. They are provided with lips, which hold them in position; **Fig. 5.18**:

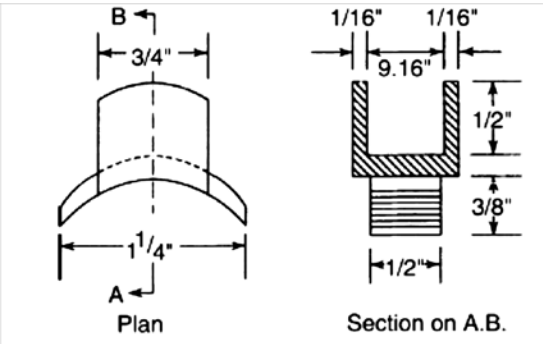

Fig. 5.18: Mota Single-Liner

3. **Use of over-size Loose-Jaws:** These jaws, which are made from thicker metal, make up for the elongation of holes when placed in position.
4. **Use of Rubber or compressed Wood Pads:** These pads, when provided under the rails, lift the rails to a position that the jaws and keys regain their grip despite the opened-up jaws. The pads also impart elasticity to the track and behave as a good vibration absorption medium.

The problem of opening-up of jaws usually arises with indiscriminate driving in of keys with non-standard heavy hammers. The use of standard keying hammers should therefore be insisted upon.

On the heavy-Haul KK-Line the rails had been fastened on Steel-Sleepers with a rigid T-head bolt and nut system using steel clips, so-called “A/B/C/D-Clips”. On the NG Matheran Hill Railway the rails are fasten to the Steel-Sleepers with a similar rigid bolt/clip/nut system; **Fig. 5.19:**

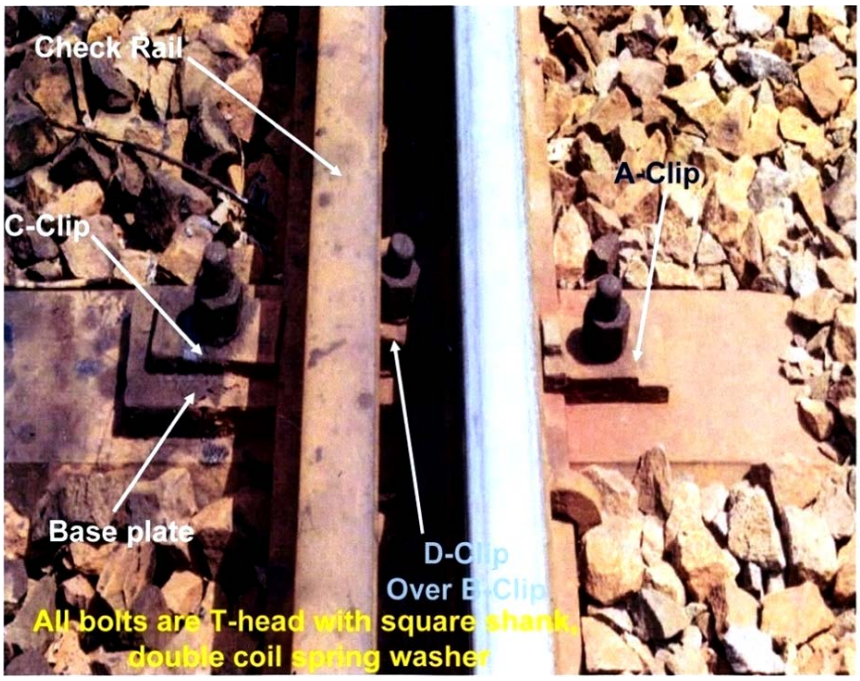

Fig. 5.19: Rigid Bolt/Clip/Nut Fastening for Steel Sleepers Pict.: Courtesy of S. Raho

5.3 CONVENTIONAL INDIAN FASTENING SYSTEMS FOR CAST IRON SLEEPERS

CST-9 cast iron sleepers consist of two cast iron plates jointed together with a tie bar, which is held in position with the help of four cotters. Rails are fastened to sleeper plates with two-keys. Cotters and tie bars are the fastenings peculiar to CST-9 sleepers, whereas two-way keys are common with steel and wooden sleepers.

5.3.1 Tie-Bars

Tie-bars are mild steel flats, which tie the two cast iron plates together with the help of cotters. Dimensions of the tie bars used for BG and MG sleepers are given in **Fig. 5.20.** The tie-bar section for BG is 50 mm x 12 mm and that of MG is 45 mm x 10 mm:

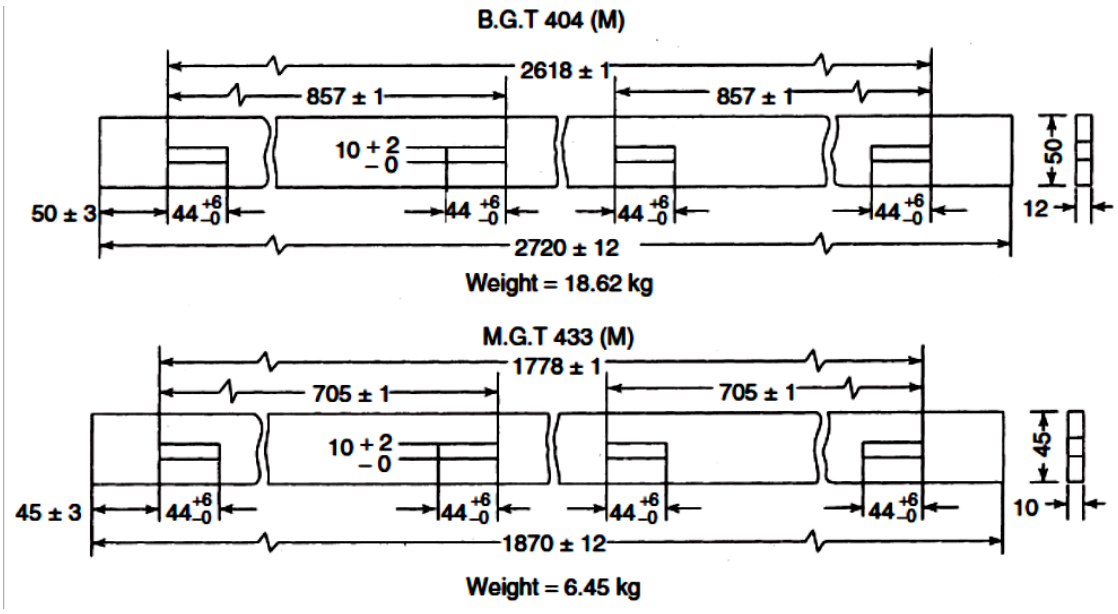

Fig. 5.20: Dimensions of Cast Iron Sleeper Fastening; MS Tie-Bar

5.3.2 Cotters

Cotters are mild steel flats, cut and bent to the desired shape. **Fig. 5.21** shows the Cotter-T 432(M) used on Indian Railways:

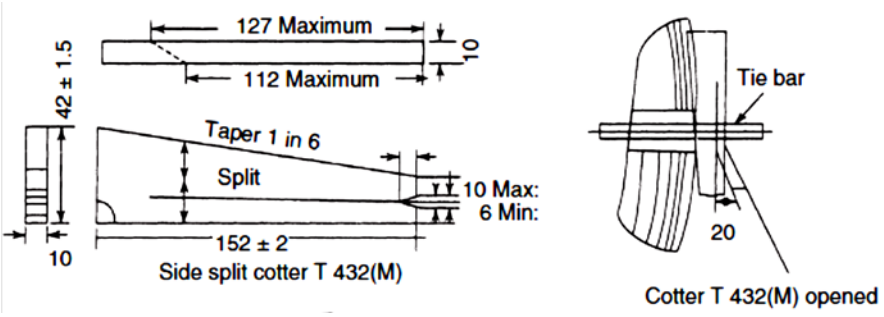

Fig. 5.21: CI-Sleeper Fastening with MS Cotters; Dimensions in [mm]

5.4 DRAW-BACKS OF THE CONVENTIONAL FASTENING SYSTEMS

Conventional fastening systems, which rigidly hold the rail to the sleepers, suffer from the following drawbacks:

1. Rails under traffic vibrate and these vibrations loosen the rigid fastening components requiring their frequent attention to keep them in position.
2. Once the fastening gets loose the vibrations cause hammering effect resulting in quicker wear of fastening components. Rail-foot also experiences faster wear. This results in reduced life of both rails and fastening components.
3. Loose ineffective fastenings allow free movement of rails on the sleepers, leading to excessive compressive and tensile forces, which can cause rail breakages/buckling of track. Long welded rails cannot be permitted on such a type of track.
4. Excessive un-damped vibrations in track loosen the ballast particles causing faster deterioration of track geometry. The track thus requires frequent tamping.

On account of these drawbacks the track structures with rigid fastening systems have a poor service life.

Elastic fastenings have been able to overcome most of the weaknesses enumerated above, leading to a strong and stable track structure. With the provision of long welded rails it has been possible to have high speed/heavy haul operation safely and economically on such tracks.

The phenomenon of rail vibration and the various types of elastic fastening systems are explained in the **succeeding Paragraphs**.

5.5 ELASTIC FASTENING SYSTEMS

5.5.1 Phenomenon of Vibration

Conventional railway fastenings are beset by an inherent flaw. Within a short life- span, when tightened on the rails, the fastenings work loose resulting in a play between fastenings and the rails, and the resulting loss of grip on the rail leads to deterioration in the overall track structure. Detailed studies have revealed that higher frequency of vibrations is the principal cause, when rigid fastenings work loose. Further investigations revealed that these vibrations are a concomitant effect of irregularities in the rolling wheel and rail contact-surfaces. It is also found that whatever be the nature of rail/wheel interacting forces, the track will vibrate corresponding to the natural frequency of its components. The frequencies are about 800 cycles per second. Their acceleration is in the order of 100 times of the gravity at moderate speed up to 100 kmph, and they increase rapidly at higher speeds. Generally the amplitude of vibration in rails is less than 0.1 mm.

- **Effect on Track**

  The high frequency vibrations shake up the entire track assembly. Sleeper packing is the first to be affected by these vibrations to be followed by the wear and tear of whole track assembly. Therefore, sleeper packing and other track disorders need to be rectified from time to time to maintain them at the safety level.

- **Effect on Rolling Stock**

  Vibrations are transmitted to the rolling stock through wheels, leading to bouncing of vehicles, wear and tear of the rolling stock components and discomfort to the passengers.

5.5.2 Functions of Elastic Fastenings

Elastic fastenings keep a firm grip on the rail, damp the rail vibrations and rail percussion waves. Besides, they are quite effective against the rail-creep. These functions of elastic fastenings help the track to withstand heavy traffic with minimal adverse effects on its assembly.

5.5.3 Ideal Rail to Sleeper Fastening

An ideal rail to sleeper fastening is expected to satisfy the following requirements:

1. **Safeguard Track Parameters:** The fastenings should provide adequate resistance against track deterioration, which depends upon the vertical and lateral hold of the fastening on the rail under static and dynamic conditions.
2. **Provide conforming Layer between Rail and Sleeper:** Rail-fastenings should prevent the rail from abrading the concrete sleeper surface thereby helping in obtaining longer service life from sleepers.
3. **Resistance to longitudinal Forces:** Fastenings should be rail-creep preventers so that the rails can safely be welded into a long length. For this purpose, the rail/sleeper creep resistance is required to be more than the sleeper/ballast resistance. The fastenings must therefore have sufficient contact pressure, which should not weaken much during the service life of the rail and fastenings. A figure very much beyond the ballast resistance is obviously not of much use.
4. **Few Components:** It should have as few components as possible and easy to install.
5. **Easy to maintain:** Day to day maintenance should not be needed. The system as a whole should last the life of the rest of the track form, but any sacrificial components should be easily renewable. Clips etc. must be able to be removed and reinserted without their performance being downgraded, and they should be resistant to unauthorized removal.

5.5.4 Essential Components of the Elastic Fastening System; Fig. 5.22a/b

The elastic fastening assembly has two essential components to function effectively:

1. an elastic rail-pad and
2. an elastic rail-clip.

In addition, an insulating liner is often interposed at the edge of the rail-foot to provide an all-round insulation of the rail in track circuited areas**.** The important features of these components are discussed in details in the **succeeding Paragraphs**.

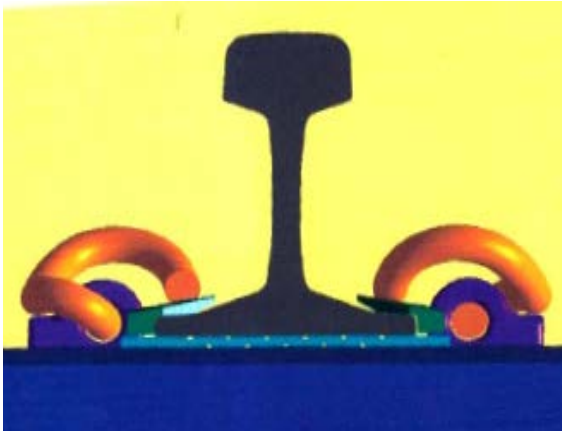

Fig. 5.22a: Elastic Fastening with Logwell-G Clip; Sketch by Logwell

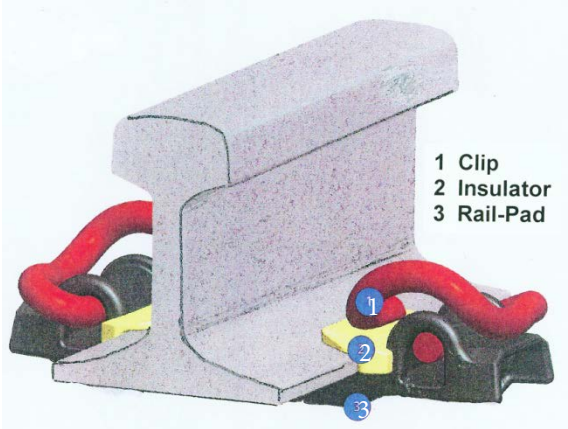

Fig. 5.22b: Elastic Fastening with Pandrol Brand e-Clip; Sketch by Pandrol

5.5.5 Elastic Rail-Pad or Sole-Plate

Although Rail-Pad is one of the less prominent parts of the fastening assembly, it is the heart of the system, and an understanding of its functions and behaviour are the key to any understanding of how rail fastenings work. The essential function of a rail-pad is to cushion the effect of vertical loading (particularly impact loading). This has two aspects:

1. By providing a conforming layer between the rail and the sleeper, the pad ensures even pressure between on the rail-seat area and
2. by acting as a spring the pad reduces the transmission of vibration and impact from the rail into the sleeper.

The rail-pads possess a special property of absorbing energy by internal friction and dissipating the same in the form of heat. When placed under the rail, they do not follow the rail vibrations closely but have a small lag, which is favourable in damping out high-frequency vibrations. To avoid any hammering effect, they ensure that there is no separation between the rail and the pad under dynamic conditions.

The pads act as a longitudinal spring to assist in the distribution of traction and braking forces along the rail.

The pad must at the same time be stiff enough to prevent excessive rail roll-over. It must also have other properties, if the fastening system is to perform satisfactorily, including:

1. Good electrical insulation.
2. Long life.
3. Consistency of properties (notably its hardness) over a wide range of operating temperatures.
4. Good resistance to abrasion and to fatigue deterioration under reversals of principal stress.
5. Resistance to deformation and/or any tendency to walk out from under the rail-seat under load.
6. Resistance to the effects of moisture, ozone, ultra-violet light, hydrocarbons or other railway related chemicals.

The most common materials from which pads are made include: Natural and Synthetic Rubbers, either solid or with some means of aeration, such as an admixture of cork granules; Thermoplastics, e.g. Ethylene-Vinyl-Acetate Polymer (EVA), High Density Polyethylene (HDPL), Ethylene-Propylene-Dien-Monomer Ter-Polymer (EPDM) in solid ore micro-cellular form or Polyurethane (PU).

The surfaces in contact with the rail or sleeper may be either plain and smooth or configured in some way (typically either grooved or studded); **Fig. 5.23** and **Fig. 5.24:**

Fig. 5.23: Studded Rail-Pad

Fig. 5.24: Grooved Rail-Pad

Pict.: See Google "*IMAGES for STUDDED RAIL PADS*"

5.5.5.1 Pad Design to reduce Vibration and the Effect of Impact

EVA, HDPE and PU have proved as very satisfactory materials for tracks, where axle-loads are high and speeds are low, as on many heavy haul railway lines. Where speeds are high (say above l10 kmph), impact and vibration forces, generated by wheels and rail-head irregularities, become with EVA or HDP-Pads damagingly severe. To counter these effects pads of much greater resilience and lower vertical stiffness have been developed. The difference in stiffness is illustrated in **Fig. 5.25a** in a compression force versus deflection diagram**.** The Sleeper Bending-Strain differences under impact on the pads between a plain 5 mm thick EVA-Pad (material A in **Fig. 5.25a**) and a 10 mm thick configured Rubber-Pad (material C in Fig**. 5.25a**) is shown in **Fig. 5.25b:**

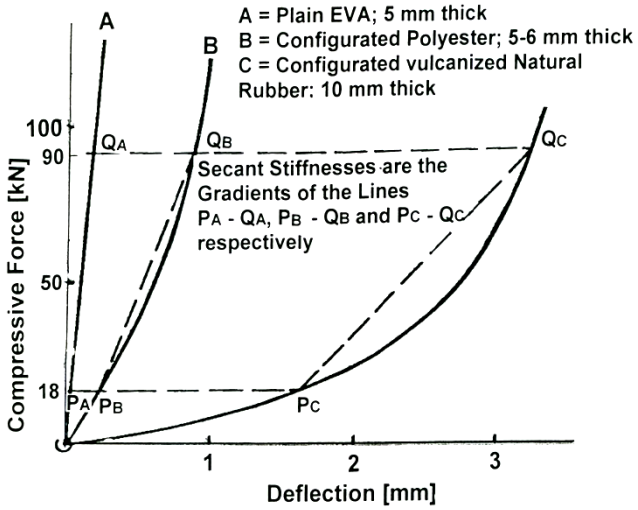

Fig. 5.25a: Typical Load Deflection Characteristics Re-designed and modified by F. Wingler

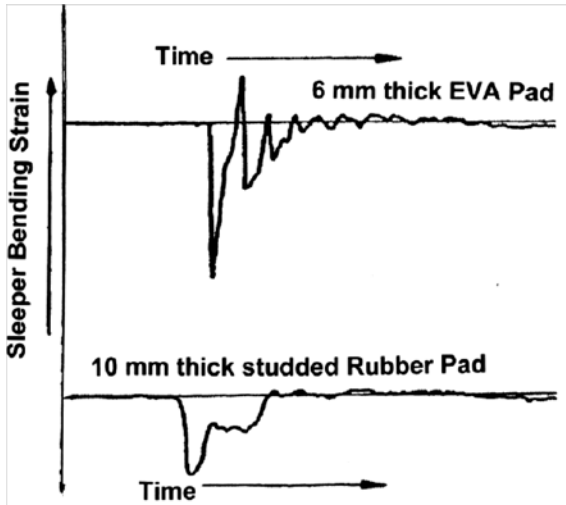

Fig. 5.25b: Impact Effects with stiff and soft Pad

Tests on materials and shape confirm the general statement that impact attenuation is primarily a function of dynamic resilience. Natural rubber provides the most resiliencies with the least damping. However as with all elastomers, it is necessary to shape the surface of the pad to produce dynamic resilience and in-practice. This cannot be achieved adequately with a thickness of less than about 10 mm. To allow a fast deformation and recovery, necessary to respond to high frequency forces, a maximum of force free area of groove or space between studs has to be provided, while the rate of recovery depends upon the resiliencies of the material. The objective is to reflect the energy back into the rail with a minimum of absorption or damping because absorbed energy is largely converted to heat at the rail/pad and pad/concrete interfaces, where it can cause depolymerisation and break-down of the pad material.

In consequence of such works, the use of soft pads has become increasingly widespread on high-speed railway tracks. Rail-pads used on the TGV, France, and Shinkansen, Japan, dedicated **High-Speed** passenger train routes with a pad stiffness in the order of 90 kN/mm. British and German Railway are now installing pads with a stiffness of 55 kN/mm and with improved impact attenuation properties.

For heavy haul routes, pads with higher stiffness are used from the durability point of view. Indian Railways have opted for a pad stiffness of 150 kN/mm on mixed traffic routes.

Considerable degree of expertise is needed in selecting the rail-pad tosatisfy the operational needs of a particular railway line. A choice has to be made about the material out of Natural Rubber, High Density Polythelene (HDPE), EVA or new patented materials such as micro-porous EDPM of M/S Saargummi, Sylodyn of M/S Getzner or Micromax of M/S Tiflex, and about the shape, which include grooved, studded, bent or flat micro-cellular pads.

H-pads and lipped pads are used to prevent the pads “walking” out under thermal and dynamic forces.

5.5.5.2 Service Life of Rail-Pads

Rail-pads should have a service life in ideal situation equal to other fastening components and also to the rail, as the replacement of pads individually is cumbersome, time consuming and comparatively an unsafe process. Measures taken to have long service life from rail-pads are in respect to:

1. The design of the rail-pad and its material, shape static and dynamic properties should be in conformity with the operational requirements of the railway line. As far as possible, its elastic properties should not get much affected by temperature range and dynamic loading. They should be weather proof and have low water absorption. They should also have high ultraviolet rays and ozone stability.
2. Rail surface should be well maintained by periodical grinding. Under rail corrugation, which induces resonance frequencies of over 100 Hz, no pad material, soft or hard, can last for

long time or protect the track structure. Poor quality welds also affect the service life of rail-pads very adversely.

3. Maintaining good track geometry and clean ballast cushion.
4. Avoid loss of toe-load of the rail-clip, which may allow rail to sleeper movement causing considerable damage to rail-pads.

5.5.5.3 Rail-Pads on Indian Railways

On the Indian Railways pads of 6.0 mm thickness have been induced (introduced) with the concrete sleepers. They are also being provided with horns, which hold the pad in position against slippage. **Fig. 5.26** delineates the broad dimensions and the tolerances permitted:

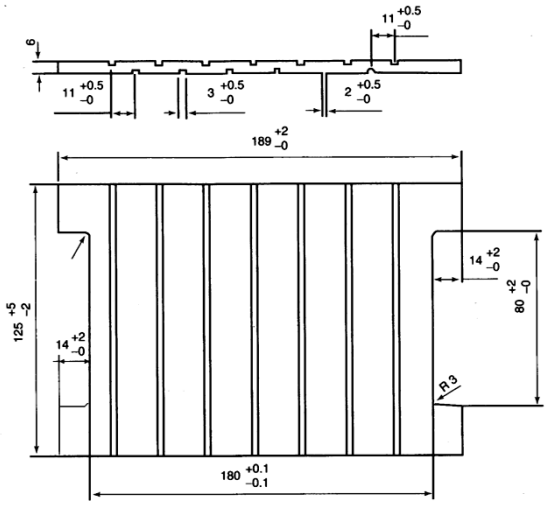

Fig. 5.26: 6 mm thick grooved Rubber Pad with Horns

The poor life of rail-pads on Indian Railway has been a matter of concern. Among the causes for poor service life is:

1. Poor quality of raw material.
2. Inadequate quality control during manufacture.
3. Loss of toe-load of elastic rail-clip in service. Poor toe-load permits rail to sleeper movement causing severe abrasion of rail-pad.
4. Poor rail-weld geometry causing excessive dynamic loading at rail-pad.
5. Poor surface condition at rail head as no rail grinding was being done. Indian Railways have since procured two rail grinding trains.
6. Grooves in rubber pad get filled with dust allowing no scope for expansion thereby causing faster deterioration of rail-pads.
7. High temperature, high humidity and heavy rain fall also cause damage to rail-pads.

In an effort to obtain the desired level of service from rail-pads, new specifications for improved rail-pads have been issued entitled: **INDIAN RAILWAY STANDARD SPECIFICATION FOR IMPROVED RAIL-PADS FOR PLACING BENEATH RAILS, PROVISIONAL - 2008.** This specification takes into account the development, which has occurred on world railways in evolving the rail-pads in meeting the wide ranging operational requirements. Indian Railway pads have to meet the unique requirement of mixed traffic-environment suitable both for high speed passenger trains and slow moving goods trains. The scope and other important stipulation made in the specification are reproduced below:

- **Scope**

  This specification has been framed in order to obtain a rail-pad, which would offer a longer service life of 300 GMT or 8 years whichever is earlier. The qualifying specifications and criteria drawn are performance based. This standard suggests for the high impact attenuation pad, which will provide higher degree of impact attenuation to reduce the level of impact damage and degradation. This specification prescribes the requirements, method of sampling and tests for new supplies of as well as the criteria for in service testing and evaluation of improved rail-pads.

REQUIREMENTS

- **Material**

The improved rail-pads shall be manufactured using Natural Rubber, Ribbed Smoked Sheet (RSS) either of grades I to 4 blended with Styrene-Butadiene Rubber (SBR) suitably compounded and vulcanized so as to conform to the requirements of the properties specified in the standard.

The improved rail-pads shall have both side studded design, and the dimensions and tolerances of rail-pads shall be as per the relevant drawing. Unless otherwise specified a tolerance of ± 5 mm shall be allowed on the length of + 0/-2 mm on width and +0.5/-0.0 mm on thickness. The dimensions of pads shall be checked with suitable gauges as per drawing approved by inspecting agency.

PHYSCAL PROPERTIES OF RUBBER

The acceptance criteria for pads are divided into following major parts:

1. Qualifying criteria.
2. In-service evaluation/test criteria.

1. **Qualifying Criteria**

Table 5.1a: Qualifying Criteria (Part I)

S. No.	Properties	Units	Values
1.	Hardness, [mm]	Shore 'A'	75
2.	Tensile Strength: (a) Before Ageing, [mm]: (b) After Ageing at 100 ± 1^0 C for 96+0 hrs. min. – 2: (c) Percentage Retention after Ageing:	[N/cm^2] [N/cm^2] [%]	1200 1000 80
3.	Elongation at Break: (a) Before Ageing, [mm]: (b) After Ageing at 100 ± 1^0C for 96+0 hrs. min. – 2: (c) Percentage Retention after Ageing:	 [%] [%] [%]	 170 120 65
4.	Modulus (relaxed) at 100% Elongation: (a) Before Ageing: (b) Percentage of Change after Ageing at 100 + 1^0 C for 96+0 hrs:	 [N/cm^2] [%]	 400-600 30
5.	Compression Set subjected to 50% Compression at 100 + 1^0 C for 24+0, max. – 2 hrs:	[%]	30
6.	Tension Set subjected to 50% Compression at 100 ± 1^0 C for 24+0, max.– 2 hrs:	[%]	25
7.	Load Compression Test:	[mm]	0.6-0.8
8.	Electrical Resistance, min.: (a) Before Immersion: (b) After Immersion:	 [MΩ] [MΩ]	 100 100
9.	Impact Attenuation, min:	[%]	30
10.	Secant Stiffness, max:	[kN/mm]	150
11.	Durability Test:	[%]	Change in values within 25%
12.	Resilience by vertical Rebound:	[%]	See Cl. 3.23
13.	Ash Content:	[%]	max. 25%
14.	Specific Gravity:	[g/cm^3]	max.1.25

2. **In-Service Evaluation Criteria**

The sample pads shall be taken out after five years service life or 300 GMT, whichever is earlier and would be subjected to the following tests:

Table 5.1b: Qualifying Criteria (Part II)

S. No.	Properties	Units	Values	Test Methods
15.	Visual Examination		Five samples taken out from trial site shall be visually examined for defects. There should be no significant tears, holes or cuts in the pad affecting the performance of the pad.	
16.	Thickness of the Pad	[mm]	The minimum thickness of the pad shall be 4.5 mm after removal from service. Five pads shall be checked.	Thickness shall be measured by any suitable instrument having least count 0.01 mm at four locations indicated on the points of the grid by dividing length and width of the pad in three equal parts. The average value shall be reported.
17.	Increase in Width	[mm]	10 mm, max. from the original specified width ignoring the tolerance value. Five pads shall be checked.	Width of the pad shall be taken at centre of pad.
18.	Load Compression Test	[mm]	Not less than 0.45 mm. Two pads shall be tested.	

The various test methods have been included in the specification, which are generally as per norm internationally followed. The new specification apart from other controls lays down the qualifying criteria in respect to impact attenuation stiffness and durability not available in the earlier IR Specification.

It is hoped that stringent quality controls and strict observance of provision in the new specification will bring the performance of rail-pads on Indian Railways at par with the world standards.

5.5.6 Elastic Rail-Clips/Tension-Clamps

If the rail-pad is considered the heart of an elastic rail fastening assembly, elastic rail-Clips/Clamps deserve to be named as the main muscle of the elastic rail fastening.

The essential functions of an elastic rail-Clip/Tension-Clamp are:

(a) To provide adequate toe-load or clamping force on the rail to ensure that the rail continues to remain in contact with the rail-pad under all static and dynamic conditions.

(b) The rails experience high frequency vibration under traffic. The most damaging range of vibrations is found in the frequency range of 800 cycles per second. The elastic rail-Clips/Tension-Clamps keep the rail-pad under compression all the time thereby damping the rail vibrations effectively. The net result is the prolonged service life of all fastening components.

(c) The Clip/Tension-Clamp toe-load (clamping-force) on the rail is kept high enough, so that the creep resistance of the rail on the sleeper is always higher than the sleeper to ballast resistance. This is an important requirement for LWR track.

It must also have other properties for satisfactory performance of the fastening system, which include:

(a) The Clip/Tension-Clamp should have a long range of deflection so that the loss of toe-load or clamping force during service on account of any permanent set due to wear of the fastening components is minimized.

(b) With a good size of bearing area, the pressure exerted on the insulating liner should be well within its safety range, ensuring long life of the insulating liner.

(c) In addition to elasticity in the vertical direction, it should have some degree of elasticity in the longitudinal direction-particularly advantages in heavy haul operation, where longitudinal forces on account of breaking and accelerating are quite high.

(d) It should be easy to install and amenable to mechanized working.
(e) It should be not prone to theft and vandalism.
(f) It should not corrode or jam during service.

5.5.6.1 Types of Elastic Rail Clamps/Tension-Clamps

Elastic rail-Clips/Clamps used on world railways are broadly classified by two categories:

(a) In the first a threaded nut/screw with a bolt are used to apply a force to a spring steel clamp; see **Paragraph 5.1.3** above. The spring steel clamp can be a round bar or a plate section. The clamping force on the rail-foot gets generated and can be adjusted by tightening the nut/screw. The possibility to adjust the clamping force is a main advantage. The German Vossloh SKL-Tension Clamps (see also **Fig. 5.15** above), the French RN-Clip/Nabla-Clip and the Japanese Kowa-Clip fall in this category.

(b) Of second category are the self-tensioning or self-stressing Clips. The spring Clip, when in position, bears at the rail-foot and against some other part of the sleeper. The Clip on installation deflects and generates a predetermined clamping force on the rail dependending on the deflection. Of this type are the Pandrol-Clips of U.K., Amsted-RPS Clips of US America, Elastic Rail-Clips and Logwell-G Clip of India.

Broad features of the fastening systems using these Clips are detailed in the succeeding **Paragraphs**.

- **Direct Threaded-Screw and Bolt Fastening:**

1. **Vossloh-Clamps:**

Fig. 5.27 and **Fig. 5.28** show the Vossloh Rail Fastening System, where the rail is tensioned by the spring deflection of approximately 13 mm to a clamping force of about 2 x 10 kN. The middle bend of the Clamp protects the rail from tilting.

Fig. 5.29 shows the Clamping-Force (Toe-Load) Deflection Diagram of the Vossloh Tension-Clamp SKL 15. The Clamp prevents the tilting of rails, as seen in the diagram.

Vossloh provides the Tension Clamp ("Spann-Klemme") SKL-B 15 with a lower Clamping Force of 7 kN to allow a certain amount of Rail-Creep, essential in some cases as at the ends of Bridges and/or CWR/LWR, to avoid that sleepers move together with rail ends.

The Vossloh Rail Fastening System is been extensively used all over the European/ Asian continent, especially in Germany, Austria and in China. It has also been adopted in ballast-less track systems on many high-speed lines of European and Chinese Railways.

Fig. 5.27: Vossloh SKL 15 Tension Clamp

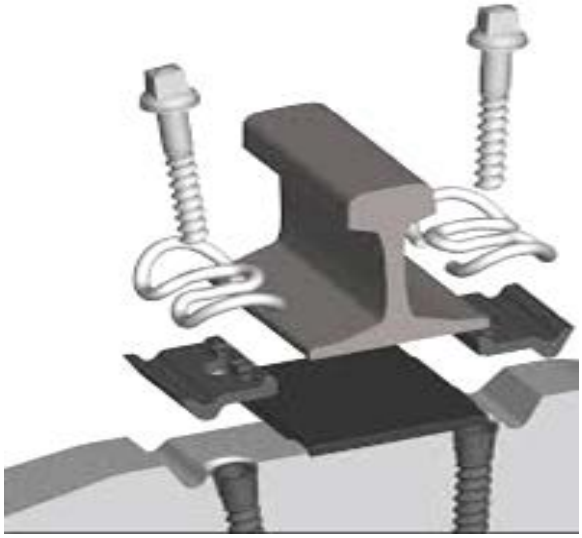

Fig. 5.28: Direct Vossloh Fastening with SKL 14 Tension Clamp

Pict./Graph by Vossloh

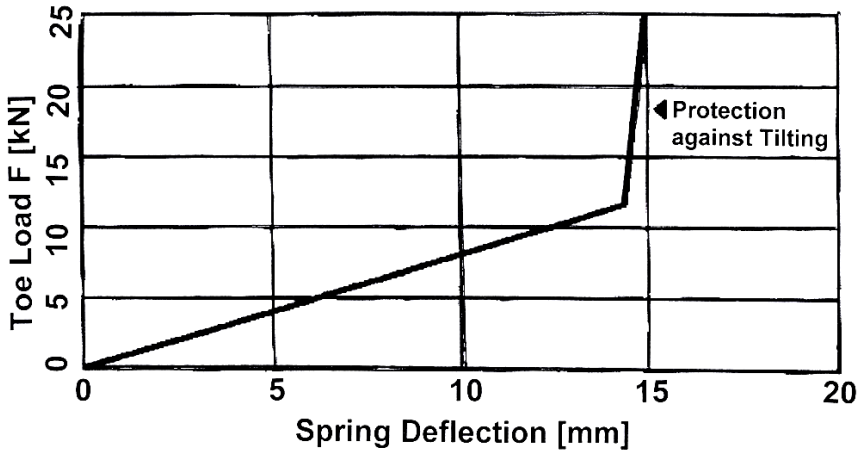

Fig. 5.29: Clamping-Force (Toe-Load) versus Deflection Diagram of Vossloh Clamp SKL 15

2. **RN-Clip/Nabla-Clip:**

Fig. 5.30 shows a RN-Clip. Its latest derivatives, the **Nabla-Clip** is shown in **Fig. 5.31**. The Nabla-Clip generates its clamping force by tightening the nut in a controlled degree. The RN-Clip has been in use in France for many years on wooden sleepers. It is also a standard fastening for two-block concrete sleepers. The Nabla System is extensively used on French TGV High-Speed lines.

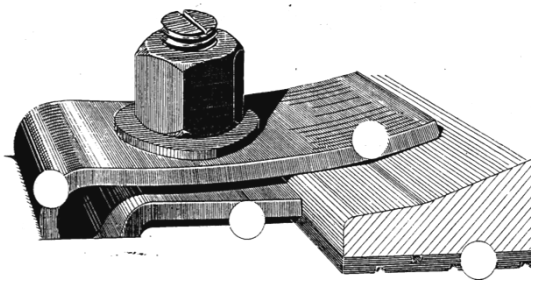

Fig. 5.30: RN Elastic Rail-Clip

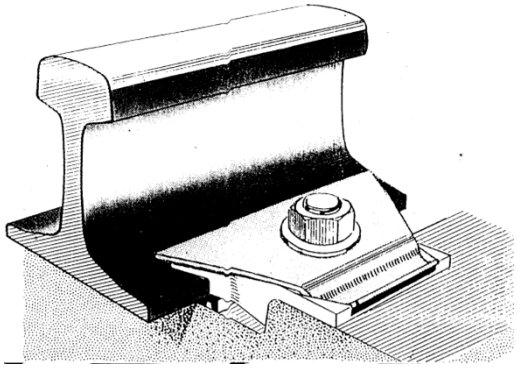

Fig. 5.31: Nabla Rail-Clip

3. **Kowa-Clip:**

Fig. 5.32 shows the Kowa Rail-Fastening. It is similar to the French RN-Clip with added facilities to adjust gauge and lateral elasticity. It is the standard fastening system on Japanese Railways:

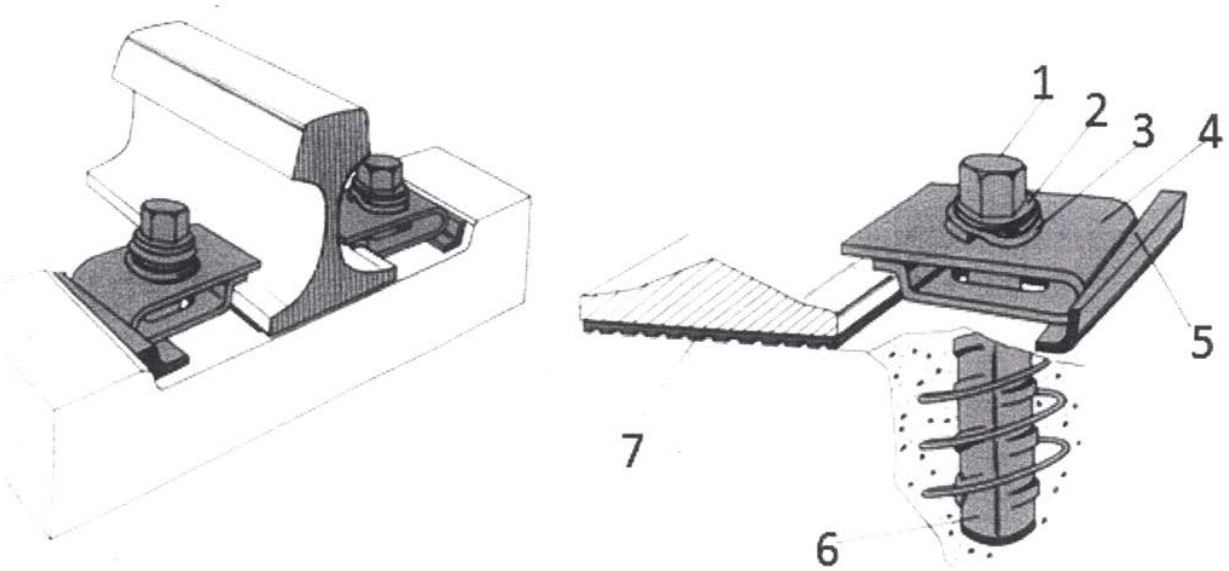

1: Hexagonal Bold; 2: Washer; 3: Coil Spring; 4: Spring-Clip; 5: Wedge; 6: Plastic Dowel; 7: Rail-Pad.

Fig. 5.32: Kowa-Clip

● **Self-tensioning Systems:**

1. Self-tensioning Pandrol Elastic Rail Clips: The self-tensioning or self-stressing elastic Pandrol-type rail clips are manufactured by giving a spatial bend to Silicon-Manganese alloy spring-steel rods. Their advantage is the simple installation parallel to the rail. Worldwide there are two types of self-tensioning Pandrol Clips in use:

1. With a clock-wise bended geometry, called also ***"right-handed"*** Clips; **Fig. 5.35 below.**
2. With an anti clock-wise bended geometry, called ***"left-handed"*** Clips; **Fig. 5.36** and **Fig. 5.66 below.**

"Right-handed" Clips have the Geometry of the letter '**G**'. "Left-handed Clips have the Geometry of the letter '**e**'

The term ***"PANDROL"*** is derived from the name of the inventor, Mr. Per Pande-Rolfsen, a Norwegian Permanent Way Engineer. Since 1959 ***PANDROL BRAND*** Clips have become a favourite fastening system on many world railways. In England the Pandrol 'e'-Series and PR-Series had been once the Standard Clips. In England new Concrete and Steel Sleepers are nowadays installed with Fast-Clips.

When installed under Deflection of about 14 mm the Pandrol Clips develop a Toe-Load* of about 12.5 kN. **Fig. 5.33** delineates the "Toe-Load" (Clamping-Force) versus Deflection-Diagram for the main type Pandrol Brand e-Clip 1800/2000 Series and PR 400 Series:

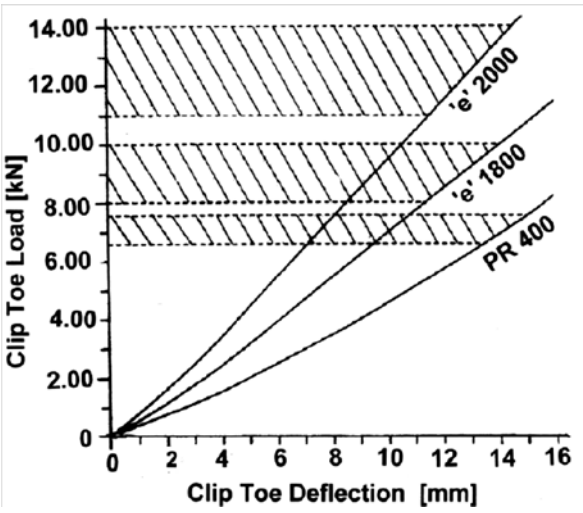

Fig. 5.33: Toe-Load* versus Deflection-Diagram of Pandrol Brand e- and PR Clips; Graph modified by F. Wingler

Fig. 5.34: Assembly with right-handed 'e' Clip Type (Pandrol/Logwell-G)

Pict. by F. Wingler

***) <u>Note:</u>** The term "Toe-Load" is a traditional term, although it represents actually a Clamping-Force measured in the unit of [kN]. The mass of 1 metric ton generates by its earth gravity a force of 9.81 kN, say: 10 kN.

The Diagram shows, that in order to generate an appropriate clamping-force, a deflection of 11 to 14 mm is needed. Without deflection the clip generates no tension and there will be no clamping force. The characteristic of self-tensioning clips is that with less deflection less tension is generated, and the clamping force gets diminished. This can happen due to corrosion, wear of liners, missing liners and worn pads in the contact areas of the rail-foot; see **Paragraph 5.6.1**. There is no mechanism to adjust a drop of tension or clamping-force.

The right-handed Pandrol Clips with clock-wise bended geometry firm as Pandrol Brand e-Clip Series; **Fig. 5.35.** When installed the clip-end clamps the rail-foot**, Fig. 5.34.** The left-handed Pandrol Clips have an anti-clock-wise bended geometry and firm as Pandrol Brand PR 400 Series; **Fig. 5.36**. When installed the middle-part of the clip clamps the rail-foot; similar to the Indian RDSO evolved rail-clip fastenings; see **Fig.5.40, Fig. 5.41** and **Fig. 5.53 below**. The left-handed Clips are nowadays predominantly used in England on turn-outs and crossings.

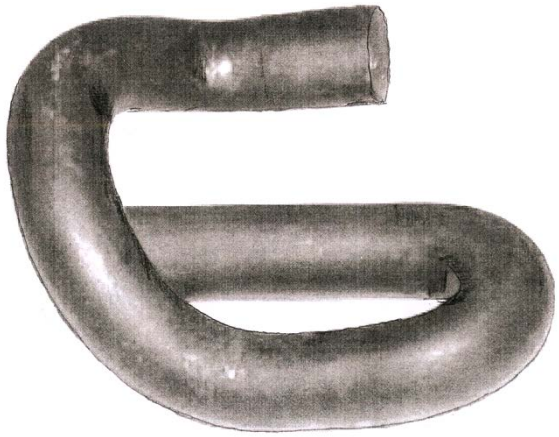

Pict. by Pandrol

Pict. by Pandrol, USA

Fig. 5.35: Right-handed Pandrol 'e' 2003 Clip Fig. 5.36: Left-handed Pandrol PR 401A Clip

The **Pandrol Fast-Clip (Fig. 5.37)** is the latest development of Pandrol. It has been developed for preassembly, faster mechanised installation and higher security against dislodging. Its advantage is that it is not parallel on-switched to the rail but in a right angle, and therefore the clip is far less vulnerable to become loose by rail-creep movements and/or vibrations.

The Pandrol Fast-Clip assemblies are available in the variants FC 1500 and FC 1600. Pandrol Fast Clip FC 1500 is made from a 15 mm diameter rod and exerts a toe-load (clamping-force) of max. 16 kN. Pandrol FC 1600, made from a 16 mm diameter rod, generates a toe-load (clamping-force) of max. 21 kN. It can be easily and fast switched on and off by a hand-puller or by a clipping machine.

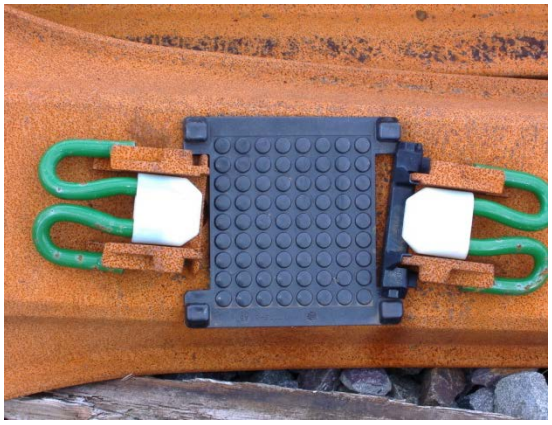

Fig. 5.37: Pandrol Fast-Clip; left Assembly on Concrete Sleeper; right Pre-Assembly on Steel-Sleeper; Pict. by F. Wingler

The **Fig.5.37** shows the clips with preassembled cap-insulators. This Fast-Clip takes a trumped around the globe especially in England, Germany, France, Poland, Sweden, Estonia, Georgia, Lithuania, Russia, Serbia, Hungary, Corsica, Sri Lanka, Cambodia, Malaysia, Saudis, Australia, China and USA. It increasingly supersedes worldwide the Pandrol Brand e-Clips. It is nowadays the favourite Clip for new installed Steel-Sleepers, and it helped them for a come-back in several European countries; see also **POST SCRIPTUM**, **Page 40/41.**

The Fast-Clip Sleepers are delivered on site with all components held captive, and the clips with the toe-insulator are at parked position. Once the sleepers are placed and the rail has been threaded, the Fast-Clip is simply pushed from the parked to the installed position. The correct load is achieved automatically.

The Fast-Clip is virtually maintenance free and a true ***"fit and forget"*** Rail-Fastening. Even under harsh conditions the Clip does not dislodge. No key-man is needed to push in regular intervals clips back, as it is needed for conventional parallel to the rail installed elastic Rail Clips, which can get loosened by rail-creep and vibration;see **POST SCRIPTUM Page 40/41.**

2. Self-tensioning or self-stressing USA Amsted RPS Fastening: **Fig. 5.38** shows the **Amsted RPS** rail-fastening widely used in USA. It is a self-stressing system with a clamping-force of about 13.5 kN at a deflection of 11 mm. It has a large deflection-range of 20 mm. **Fig. 5.39** presents the clamping-force versus deflection curve, which shows that there is a further margin for deflection as a safety measure. The Clip has a wide bearing area at the insulating liner, which helps to prologue the life of the liner. Its advantage is that it is on-switched not parallel to the rail but in a right angle, and therefore the clip is far less vulnerable to become loose by rail-creep and/or vibration. The Clip has also some degree of longitudinal elasticity considered advantageous for heavy haul operation. On North American Railroads, where it is extensively used, the system has a life almost equal to the life of the rail.

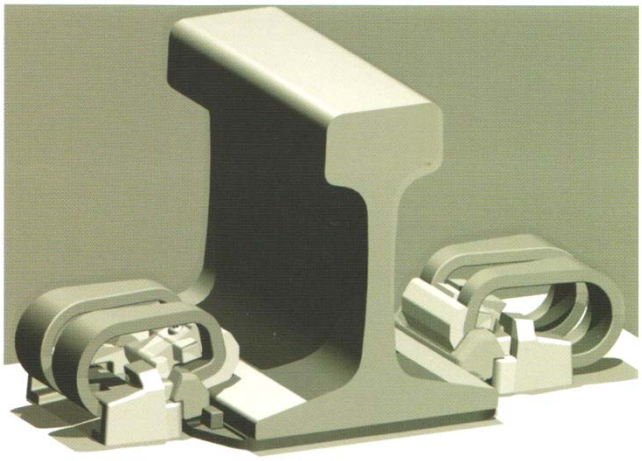

Fig. 5.38: Amsted RPS System

Fig. 5.39 represents the Clamping-Force versus Deflection-Curve of the RPS Amsted Fastening:

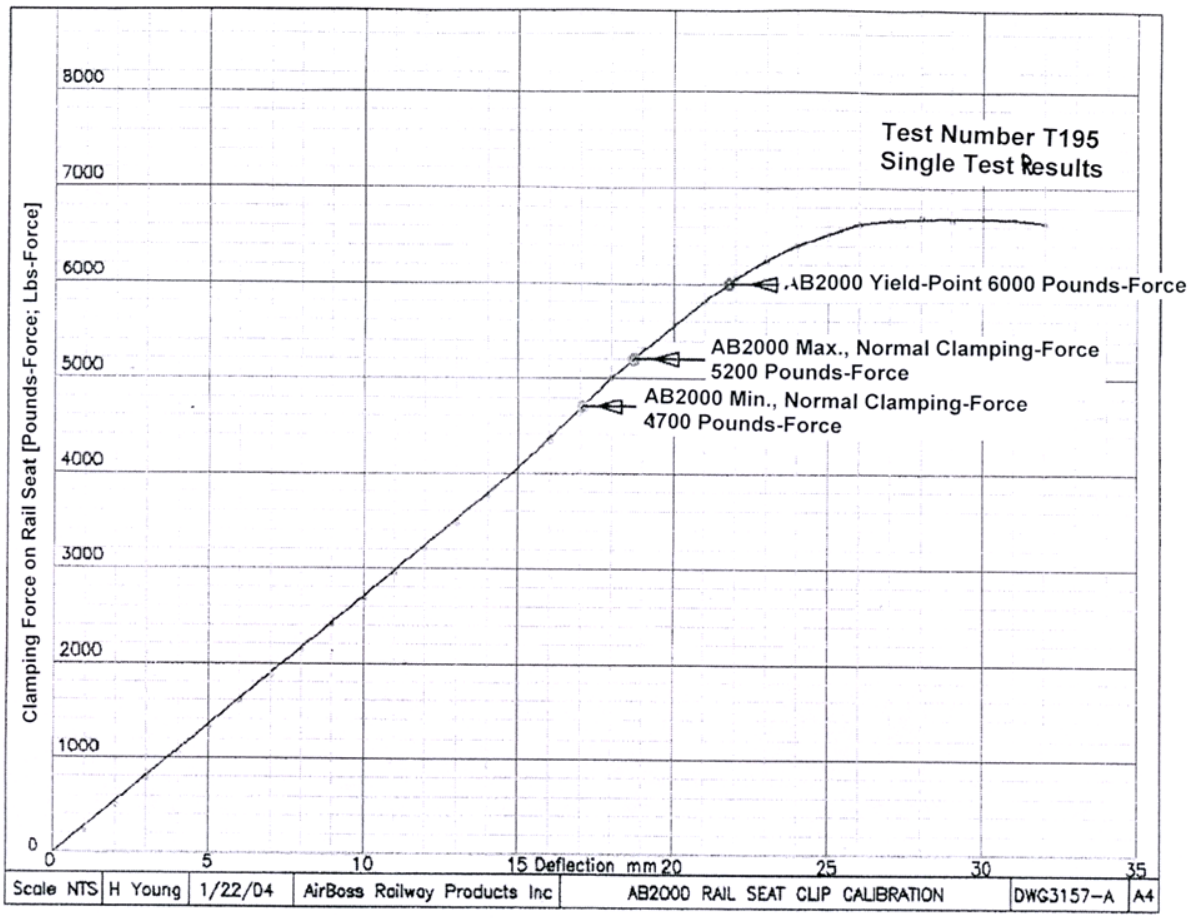

Fig. 5.39: Clamping Force versus Deflection Diagram; U 2000 Clip Calibration

<u>Note:</u> 1000 lb_F, pounds-force, or 1 kips equal a force of 4.44 kN; say: 4.5 kN ("kilo Newton").

3. Self-tensioning elastic Rail Clips (ERC`s) of Indian Railways: The elastic Rail-Clips used on Indian Railways have their origin in the self-stressing British Pandrol-Clip of the left-handed PR 401 with an anti clock-wise bended geometry, earlier manufactured by Guest, Keens & Williams; **Fig. 5.36**. RDSO has carried out certain changes in the spring steel rod diameter and the spatial curve geometry keeping the first arch lower and the second arch higher, resulting in various types of Elastic Rail-Clips for BG and MG. As typical for left-handed clips, the RDSO evolution **Mark-III**, **Fig. 5.40,** clamps with its middle-part the rail-foot; **Fig. 5. 41** and **5.42;** see also **Fig. 5.53 below.** Out of the RDSO evolutions the MARK-III ERC has become the Standard-Clip of INR**:**

Fig. 5.40: MARK-III ERC

Fig. 5.41 MARK-III Assembly

Pict. by F. Wingler

The distinctive features are

(a) the low first arch or so-called "Front-Arch" - the first arch after the Centre-Leg, on which by a key-hammer blow from right-to-left the ERC is pushed into the housing (holder, tunnel, channel, groove) on the shoulder-insert plate - and

(b) the high second arch, called "Rear-Arch", which is pushed by a hammer blow from left-to right for removal.

The Indian ERC`s are manufactured from a 20.64 mm steel rod. Typical for MARK-III is the manufacture stamp on the End-Part. The Clip has a flattened patch below its Middle-Part in form of a 35 x 12 mm ellipsoid. As the Pandrol PR 401 origin the Clip-End of Mark-III is not round, but is flattened; see Graph in **Fig. 5.42** and **5.43b.**

MARK-III develops under deflection a Toe-Load (Clamping- Force) of 8.50 to 11.00 kN and provides a creep-resistance of 10.00 kN per rail seat.

Once fixed in position, the Clip is expected to maintain its desired toe-load. But it needs subsequent attention by patrolling key-men. It is applied parallel to the rail and is driven with a key-hammer by blows on the Front-Arch or pulled by a tool usually from right-to-left. It can be removed with an ordinary hammer with blows from left-to-right on the Rear-Arch or with a simple pulling device. When driven in, the Centre-Leg of the Clip is housed in the shoulder-groove, and the Clip deflects from its original shape to exert a high toe-load (clamping-force) on the rail provided the liner is not missing or worn and the rail-pad develops its full elasticity, The friction grip of the Clip in the housing is two times that of the Clip on the rail under sound deflection so that the rail-creep forces will have less influence to dislodge the Clip.

Fig. 5.42 delineates the mode of assembly and the broad dimensions of the RDSO T- 3701 ERC MARK-III. But note that nowadays the clip-end, resting on the shoulder-plate, is not round as in the RDSO drawing, but it is flattened at the bottom like on Pandrol PR 401, from where Mark-III had been originated; see picture from the side of **Fig. 5.43b;** compare with **Fig. 5.36.**

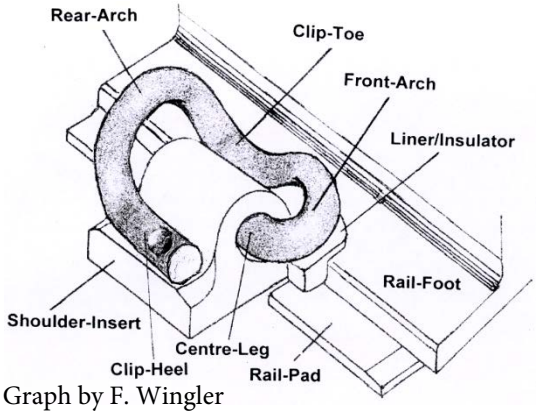

Graph by F. Wingler

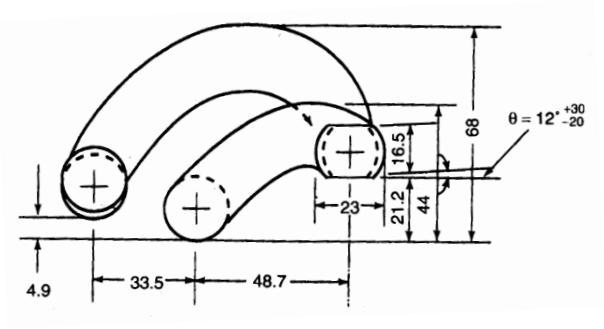

RDSO Drawings

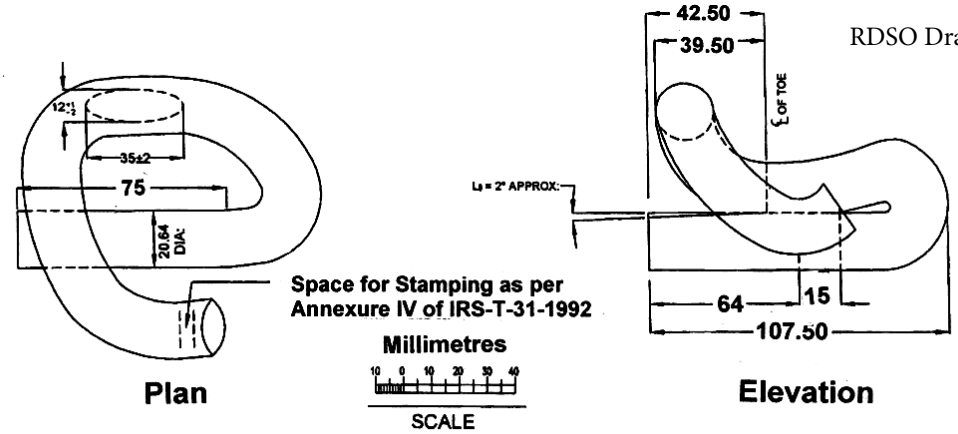

Elastic Rail Clip MARK III with flat Toe for 60 kg UIC/52 kg Rail Sections

Fig. 5.42: Assembly and Dimensions of MARK-III ERC

The Clip has a flattened patch below its Middle-Part in form of a 35 x 12 mm ellipsoid to be gentle with less damage and wear for the Polymer-Insulator when assembled. By tradition the Indian Track-Man is used to call this Middle-Part, clamping the Rail-Foot, as ***"Clip-Foot"*** and the End-Part of the ERC, counterbalancing the clamping vector forces on the shoulder-insert plate, as ***"Clip-Heel"***. The Heel is below flattened; the ERC is catalogued therefore also as ***"Flat-Toe ERC"***; **Fig. 5.43a/b**:

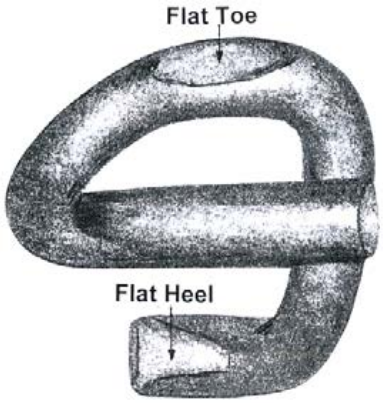

Fig. 5.43a: MARK-III from below

Fig. 5.43b: MARK-III from the Side

Pict. by F. Wingler

Fig. 5.44: MARK-V

Pict. by RDSO

A further development from RDSO for heavy haul tracks is the **MARK-V**, RDSO 5919 ERC **(Fig. 5.2.44 above**) obtaining a higher toe-load (clamping-force) on existing concrete sleeper fastening assemblies. It is manufactured from a spring steel rod of 25 mm diameter with the Centre-Leg machined to 23 mm diameters so that the Centre Leg will fit in the existing cast iron housing of 23 mm calibre. With a toe-load (clamping-force) of 12.00 to 15.00 kN it provides an increased creep resistance needed for heavy haul tracks.

For the use on fish-plated joints there is a longer version of Mark-III with the length of 127 mm, designated as RDSO T-4158, **Fig. 5.45**:

Pict. by F. Wingler

Fig. 5.45: RDSO T-4158 elongated ERC for Assemblies with (insulated) Fish-Plates

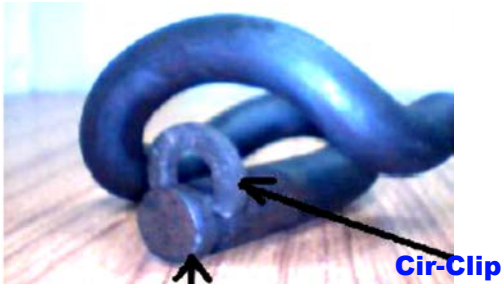

Fig. 5.46: Anti-Theft ERC with Cir-Clip

The main properties of the various types of ERC`s developed by RDSO are given in **Table 5.2:**

Table 5.2: Properties of elastic Rail-Clips

RDSO Drawing No. of Clip	Type of Clip	Diameter [mm]	Approx. Weight of Clip [kg]	Toe – Deflection [mm]	Toe-Load Range [kN]	Contact of Surface for flat Toe Clips [mm] minimum	
						Major Axis	Minor Axis
T-1892	ERC round Toe	20.64	1.00	11.4	6.45-8.00	-	-
T-3700	ERC flat Toe	20.64	1.00	11.4	6.45-8.00	28	9.5
T-3701	ERC MK-III flat Toe	20.64	0.91	13.5	8.50-11.00	28	9.5
T-2722	ERC MK-II flat Toe*	18.00	0.60	11.2	7.00-9.00	20	8.0
T-4158	ERC-J	20.64	1.00	35	3.00	-	-
T-6255	Anti-Theft Elastic Rail-Clip secured on Cent.-Leg with Cir-Clip T-6255**	20.64	0.94	135	8.50-11.00	28	9.5
See **Fig. 5.46 above**		-	0.022	-	-	-	-
T-5919	ERC MK-V***	23.00 (Centre-Leg Diameter 20.64 mm)	1.08	135	12.00-15.00	28	9.5

Note: *) MARK-II developed 1988 for MG. **) Adopted 2007; after installing in the housing, the Centre-Leg is secured with a cir-clip against dislodging; **Fig. 5.35c** above. ***) MARK-V Clip, developed for high axle-load tracks (25 t), remains presently at the design-stage and might be later standardized for Dedicated Freight Routes.

4. Logwell G-Clip developed by LOGWELL FORGE Ltd.: The Indian Company **LOGWELL FORGE Ltd.** has developed a rail-clip, the so-called Logwell-**G Clip; Fig. 5.47 and Fig. 5.48.** It is an improved version of the internationally used right-handed Pandrol Brand e-Clips, which are clock-wise bended from spring-steel rods onward like the letter "***G***". The heel, resting in the assembly on the shoulder-plate, has a more distinctive seesaw-bend than its Pandrol paragon:

Fig. 5.47: Logwell-G ERC

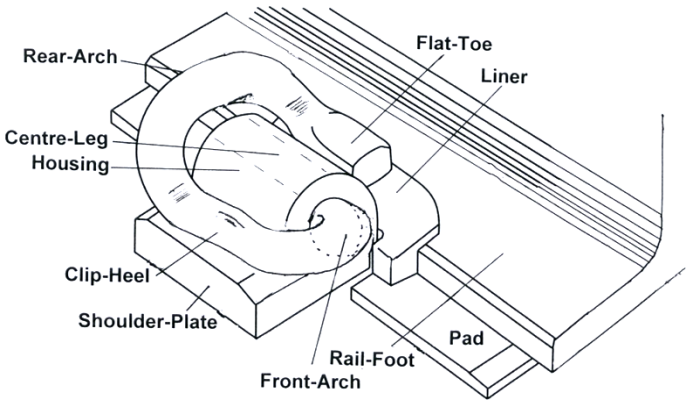

Fig. 5.48: Installation of Logwell-G

Graph by B. Lichtberger, modified by F. Wingler

The important characteristics of the standard Logwell-G Clip are listed in **Table 5.3**:

Table 5.3: Important Characteristics of the Standard Logwell-G Clip

1.	Material	251A 58-BS 970
2.	Hardness	44-48 HRC
3.	Toe-Load	10 - 13 kN
4.	Deflection	11.5 mm
5.	Diameter	20.64 mm
6.	Weight	approximately 825 g
7.	Flat Toe bearing Area	15 mm x 36 mm
8.	Ease of Installation	very easy
9.	Suitable design for all Types of Rails and Sleepers	yes

A comparative chart of important characteristics of Logwell-G, Pandrol Brand e- and RDSO MARK-III and MARK-V ERC`s is given in **Table 5.4.**

Table 5.4: Characteristics of ERC`s

Comparison of Logwell-G Clip, Pandrol 'e' Clip, RDSO Mark-III and Mark-V Clips					
S. No.	**Characteristics**	**Logwell-G Clip**	**Pandrol 'e' Clip**	**Mark-III Clip**	**Mark-V Clip**
1.	**Material**	251 A 58 to BS 970: Part II: 1998	250 A 58 to BS 970: Part II: 1998	55 Si7 to IS: 3195-1992 & BS: EN 45A	Same as Mark-III
2.	**Hardness**	44-48 HRC	44-48 HRC	40-44 HRC	40-44 HRC
3.	**Toe-Load***	10-13 kN	10-13 kN	8.5-11 kN	12-15 kN*
4.	**Diameter**	20.64 mm	20.0 mm	20.64 mm	23 mm, Centre-leg Diameter: 20.64 mm
5.	**Weight**	825 g	745 g	910 g	1.08 kg
6.	**Flat Toe**	15 x 36 mm	15 x 36 mm	12 x 35 mm	12 x 35 mm

*) The "Toe-Load" is an old traditional term. It is actually a Clamping Force measured according International Standards of Units (ISU) in [kN]. Sometimes the unit "kilogram-force" [kgf] is in use. 1 kgf = 1 kp = 9.81 N (say: 10 N).

Note: MARK-V Clip is at the designed stage and is not yet standardized. With a toe-load (clamping- force) of about 12.50 kN it provides an increased creep resistance needed for heavy haul operation. After long length trials on Indian tracks the Logwell-G Clip has been cleared for universal adoption.

5.5.6.2 Manufacture of Elastic Rail-Clips for Indian Railways

The Clips are manufactured from rolled silicon-manganese spring steel rounds conforming to Grade 55 Si7 of IS: 3195-1992. The Clips are hot formed and are subsequently oil hardened and tempered to give uniform hardness across the section. The Indian Railway`s Standard Specification for Elastic Rail-Clips, S.-No. T-31-1992 stipulates among other things the quality of raw materials, the technical requirements, the inspection and testing procedures for the different designs of Elastic Rail-Clips (ERC`s). Among the prescribed tests are chemical analysis, hardness test, dimensions check, toe-load (clamping-force) test and application and deflection test.

5.5.6.3 Quality Control during the Manufacture of Elastic Clips

Elastic fastening components are subjected to extreme loading conditions, often beyond their fatigue limit on account of large variations in vertical, lateral and longitudinal forces bearing upon them. Strict quality controls are therefore exercised during the manufacture of the components.

The quality control is exercised by ISO 9002 on the ERC`s manufacturing companies. The quality controls on the production of quality ERC`s are indicated below; **Table 5.5:**

Table 5.5: Quality Controls and Care to be taken

SI. No.	Quality Controls
1.	Identification of the right producer of silicon-manganese steel rods.
2.	Quality checks on rods, i.e. physical, chemical and metallurgical.
3.	Care in the transport, handling and storage of raw materials.
4.	Quality checks in the process of shearing.
5.	Process control during heating, forging, oil quenching, tempering etc, with special emphasis on the quality checks on the dies.
6.	Carrying out mandatory quality control tests prescribed for the final product.
7.	Care in packaging, handling and transport.

5.5.7 Insulating Liner; Fig. 5.49:

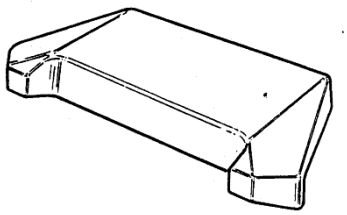

Fig. 5.49: Insulating Liner

Insulating liners form an integral part of the elastic Rail Fastening System for concrete sleepers. They are interposed between the elastic rail-Clip, rail-foot and the cast iron shoulders. They prevent electrical contact between the rail-foot and the cast iron inserts, which is an essential requirement in track circuited areas. In non track circuited areas steel-liners are used to fill in the gap as all the sleepers are manufactured with a standard rail-foot dimension.

Steel-liners wherever used have caused heavy corrosion of the rail-foot leading to premature rail renewal. Paintings of rails and other measures to combat corrosion have not been very effective. British Rail and Sri Lanka Railways continue with the use of nylon insulating liners even on lines without track circuiting. The insulators serve as a sacrificial wear component to prevent mutual abrasion of the outer edge of the rail-foot and the shoulder. IR may have to follow British Rail practice to save their rails from corrosion.

Insulating liners vary greatly in size and shape and are made from plain nylon or glass filled nylon. Their environment is very harsh, involving exposure to moisture, sun, oil (both fuel and lubricating), night soil from trains and other pollutants, in addition to being subjected to high magnitude of track forces.

Indian Railways after having tried nylon and composite liners have now standardized glass filled nylon liners of a thickness of 8 to 10.5 mm; **Fig. 5.49** and **Table 5.5**

Even with the use of glass filled nylon liners, they have a short life in track and require frequent replacements. Their cracking in service is common if sufficient care is not taken in driving and removal of elastic rail-Clips. This phenomenon is quite common on world railways, where Pandrol-Clip type fastening system is in use. Efforts are therefore continuing for developing optimal design of insulating liners both in terms of shape and material, including their separation into two parts, one under the Pandrol Clip and the other between the outer edge of the rail-foot and the metallic insert; compare with the arrangement of the Pandrol Fast-Clip, **Fig. 5.37. Fig. 5.50** shows the Pandrol 'Re' assembly.

The PANDROL 'Re' system has been designed to achieve savings in man-power during re-railing processes and also to improve the longevity of the rail-fastening components of older types of concrete or steel sleepers, by extending the durability of the components towards the residual life of the sleepers.

Fig. 5.50: Two-Part Insulating Liner; "Pandrol 'Re' Assembly"; Pict. by Pandrol

On Indian Railways all the concrete sleepers are cast to a standard dimension suited to 60 kg UIC rails. When 52 kg IRS rails are laid on such sleepers, insulating liners of varying thicknesses have to be used on gauge and non gauge site to achieve the required gauge.

Fig. 5.51 with **Table 5.6** gives the details of the GFN liners standardized on Indian Railways for 60 kg and 52 kg Rails.

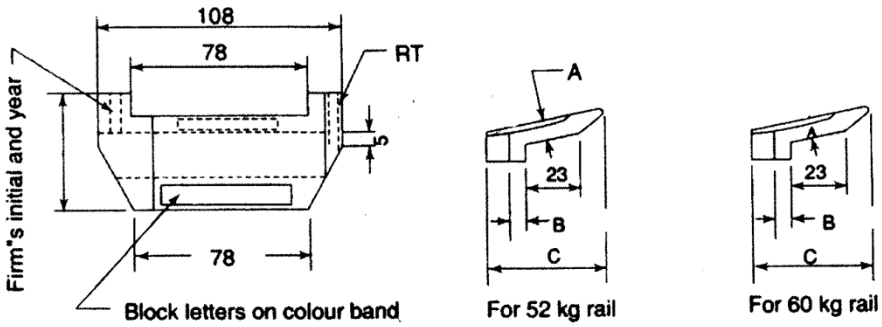

Fig. 5.51: GFN-66 Liner

Table 5.6: Details of IR Standard GFN Liners

S. No.	Rail Section	Drg. No.	Identification Mark: Colour-Band	Identification Mark: Print on	A [mm]	B [mm]	C [mm]	Slope
1.	60 kg UIC	RDSO T-3706	White	60 kg Rail on 60 kg Sleeper	8.0	5.5	50.5	1 in 6
2.	52 kg	RDSO T-3707	Yellow	52 kg Rail on 60 kg Sleeper (GS)	9.5	9.0	54.0	1 in 6
3.	52 kg	RDSO T-3708	Light Green	52 kg Rail on 60 kg Sleeper (NGS)	10.5	15.0	60.0	1 in 6

GS: Gauge Side
NGS: Non Gauge Side

5.5.8 Inserts and Anchors for fastening Assembly

To hold the rail in position the elastic rail fastening system is anchored to the concrete sleepers by a shoulder, which is cast into the sleeper during manufacture. The in-casted anchorages cannot be renewed. It's important that they should last as long as the sleeper, and remain securely fixed throughout their lifetime. These anchored inserts are generally made out of ductile cast iron, typically out of malleable or SG iron, resistant to corrosion and to be formed into complex geometric shapes.

Indian Railways have laid down detailed specification for the SGCI inserts, provided in their fastening system. **Fig. 5.52** gives the details of the inserts:

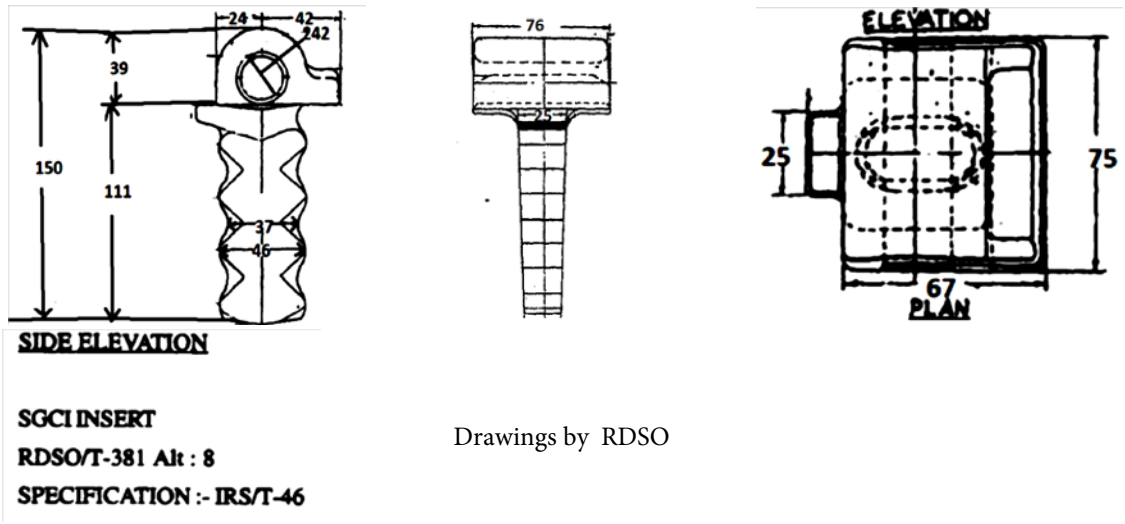

Drawings by RDSO

Fig. 5.52: SGCI Inserts; Dimension in [mm]

As the toe-load exerted by the elastic rail-Clip gets affected by the geometry and the location of the shoulder, it is necessary that they are manufactured to close dimension tolerances and anchored into the sleeper at the proper location and the right position.

5.6 ELASTIC FASTENING SYSTEM FOR CONCRETE SLEEPERS FOR INDIAN RAILWAYS

From the time of introduction of elastic fastenings Indian Railways have used the Pandrol-type system. All the concrete sleepers on Indian Railways are provided with these self-tensioning elastic Rail-Clips (ERC). The assembly **(Fig. 5.53)** consists of:

1. Two malleable cast iron inserts, which are cast in the concrete during manufacturing.
2. Two elastic Clips.
3. Two insulating Liners.
4. One elastic Pad/grooved Rubber Sole-Plate (GRS).

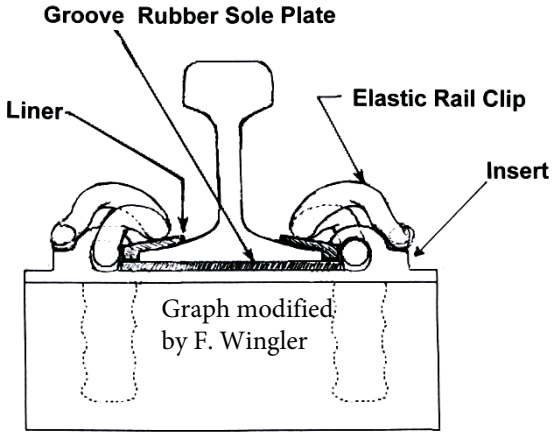

Graph modified by F. Wingler

Fig. 5.53: Elastic Fastening with ERC Mark-III on Concrete Sleeper; Pict. by F. Wingler

At each rail-seat, the rail rests on a resilient rubber pad between two cast iron inserts, which provide the rail a precise and robust lateral location. Elastic rail-clips, when driven into the housing of the insert, exert the necessary toe-load on the rail-foot. A nylon insulator is interposed at the edge of the rail-foot. Rubber pad and nylon insulators together insulate the rail. When a track circuiting is not needed, a steel-liner of the shape and size of the nylon-liner is substituted.

Long Welded Rail (LWR) tracks in India are always laid on concrete sleepers, The LWR track demands that the fastenings prohibit any relative movements between rail and sleeper. On the

breathing lengths, where the rail necessarily expands and contracts, the sleepers will move along with the rails without any differential movement between them

Experiments conducted on Indian rail-tracks have revealed that concrete sleepers have a longitudinal ballast resistance of 137.4 N/cm/rail, which is = 137.4 x 60 = 8244 (say 8250 N or 8.25 kN) per rail and per sleeper, assuming a centre to centre sleeper spacing of 60 cm.

To avoid any relative movement, rail to sleeper creep resistance should be over 8.25 kN per rail-seat all along during the service life of the track. Assuming a loss of 20% during service life of the fastening system, the initial creep resistance should be in the order of 10.50 kN per rail-seat.

The toe-load (clamping-force) of the elastic rail-clip governs the rail-creep. The rail to rubber pad friction coefficient [μ] is usually in the order of 0.5 - 0.7. The friction coefficient under Indian conditions may be assumed to be 0.6. To have a rail-creep resistance on the rubber pad of over 10.50 kN, the toe-load of each elastic rail-clip should therefore be approx. 8.90 kN. This toe-load of the Clip will have a sufficient margin for any reduction in the value of [μ] during service.

Mark-III elastic rail-clips, standardized on Indian Railways, develop under deflection a toe-load of 8.50 -11.00 kN. This is sufficient to meet the LWR track requirements on concrete sleepers.

On heavy haul tracks, long trains with heavier axle-loads (25 metric ton or above) will run at higher speed subjecting the track to much harsher operational conditions, particularly in respect to higher levels of traction and breaking forces. For a reasonable performance on heavy haul tracks the fastening system will need to be up-graded from the present Indian Railway Standards.

To meet the heavy haul track requirements, Indian Railways have recently approved the use of the Mark-V ERC with a toe-load range of 12.00-15.00 kN and Logwell-G Clip with a toe-load range of 10.00-13.50 kN.

The ERC assembly has no provisions to adjust the gauge and toe-load (clamping-force). Latter gets ruled by the deflection. Attempts are being made to provide a scope for such adjustments with insulating liners of varying thicknesses.

RDSO has developed a number of rail-seat assemblies, using ERC-Clips together with various types of different rail/sleeper combinations. **Table 5.7** gives the relevant RDSO drawing numbers of these assemblies.

Table 5.7: RDSO Drawing Numbers of Assemblies

Assembly with	Name of Component and relevant RDSO Drawing Number				
Type of Clip	elastic Rail-Clip	SGCI Insert	GR Soleplate	Liner	
				GFN-66	Metal
• 52 kg Rail on 52 kg Concrete Sleeper (BG)					
1. ERC ROUND TOE	RDSO/T-1892	RDSO/T-381	RDSO/T-3703	RDSO/T-2505	RDSO/T-645
2. ERC FLAT TOE	RDSO/T-3700	RDSO/T-381	RDSO/T-3703	RDSO/T-3702	RDSO/T-3738
3. ERC Mk-III	RDSO/T-3701	RDSO/T-381	RDSO/T-3703	RDSO/T-3702	RDSO/T-3738
• 52 kg Rail on 60 kg Concrete Sleepers (BG)					
ERC Mk-III	RDSO/T-3701	RDSO/T-381	RDSO/T-3711	RDSO/T-3707 (GS) and RDSO/T-3708 (NGS)	RDSO/T-3741 (GS) and RDSO/T-3742 (NGS)
• 60 kg Rail on 60 kg Concrete Sleeper (BG)					
ERC-Mk-III	RDSO/T-3701	RDSO/T-3781	RDSO/T-3711	RDSO/T-3706	RDSO/T-3740
• 90R Rail on Concrete Sleeper (BG)					
ERC Mk-II	RDSO/T-3722	RDSO/T-3087	RDSO/T-3724	RDSO/T-3723	RDSO/T-3739

GS: Gauge Side
NGS: Non Gauge Side
Note: Liners for Mark-V Clip would be the same as for Mark-III Clip

5.6.1 Maintenance of Elastic Fastenings System for Concrete Sleepers

1. **Loss of Toe-Load of elastic Rail-Clips:** This occurs either on account of poor quality control during manufacturing or by over stretching in field. Poor toe-loads lead to:

(a) Rail to sleeper movement, which can cause buckling of track.
(b) Hammering action on the sleeper, destroying the elastic assembly and damaging the sleeper.

ERC toe-load can be measured using toe-load measuring device, which essentially consists of a calibrated helical spring. The pulling force required to lift the toe of the ERC is indicated by a pointer on a graduated scale. It is necessary that on suspect locations the toe-loads of ERC`s are measured and ERC's with poor toe-loads replaced.

2. **Ineffective Rubber Pads:** Rubber pads worn out during service get displaced or have a permanent set. Such pads should be replaced to ensure efficient functioning of the assembly.
3. **Breakage of insulating Liners:** Insulating liners are comparatively a weaker component of the elastic fastening assembly. Liners can crack or break if adequate care is not taken during Clip driving. Cracked liners should be replaced before they affect the track circuiting operation.
4. **Corrosion and Seizure of ERCs with MCI-Inserts:** The phenomenon is more noticeable in the coastal areas. Its remedy lies in the application of grease (IS: 408, 1981) at the contact area after cleaning them thoroughly

5.7 ELASTIC FASTENING FOR WOODEN SLEEPERS

- **Pandrol Rail Fastening Assembly**

This consists of Pandrol Rail-Clips, a rubber pad and a steel or cast iron bearing-plate. The base plate is fixed to the sleeper with standard plate screws of 20 mm diameter. Two Pandrol-Clips are used per base-plate, one on each side of the rail; see **Fig. 5.54** and **Fig. 5.55**:

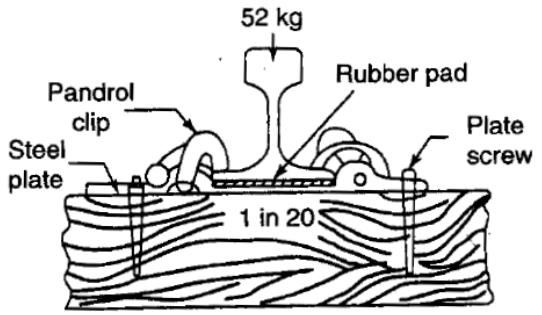

Fig. 5.54: ERC-Clips on Wooden Sleeper and with Steel Bearing-Plate

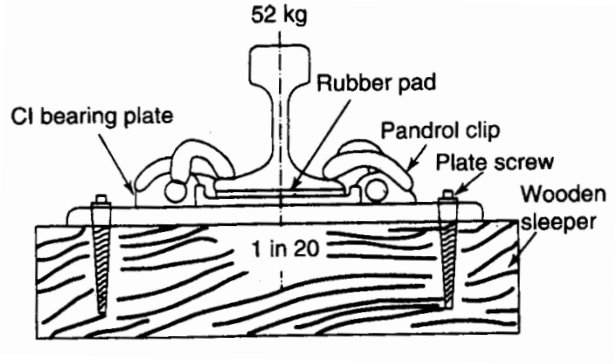

Fig. 5.55: ERC-Clips on Wooden Sleeper and with CI Baring-Plate

5.8 ELASTIC FASTENINGS FOR STEEL TROUGH SLEEPERS; Fig. 5.36

Indian Railways use Pandrol Clips on steel trough sleepers in the following ways:

1. **With Welded Pad-Plates:** A steel pad-plate with grooves (**Fig. 5.56**) is welded onto the steel sleeper. The pad-plate is of mild steel either pressed or rolled into the desired shape. It has to conform to rigid dimensional tolerances so that Pandrol-Clips, when fixed in position, give the desired toe-load.

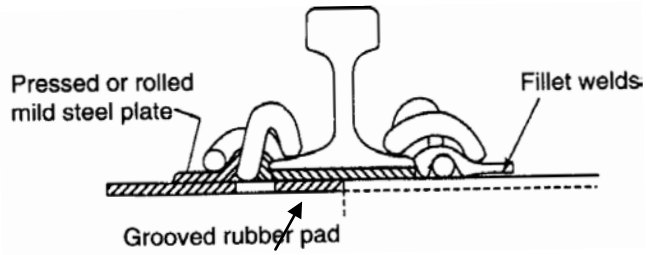

Fig. 5.56: ERC-Clips on old Steel Sleeper

The method is quite useful in the rehabilitation of old steel sleepers, whose rail-seats have corroded or cracked. The method is also being employed for making use of new steel sleepers,

which were earlier rejected on account of dimensional tolerances in respect of location of holes, but had cant at the rail-seat within accepted limits. Steel sleepers having cant outside the accepted limits are not welded with pad-plates and are used as such on unimportant lines in the yards.

Steel sleepers with pad-plates and Pandrol-Clips are being extensively used on high-speed lines in the Indian Railways and are giving good service.

3. **With Modified Loose-Jaws:** Modified loose-jaws are made from silicon-manganese spring steel either rolled or forged to the desired shape; **Fig. 5.47**. They take their position in the steel sleeper holes meant for ordinary loose-jaws, and they hold the Pandrol-Clips in position, which in turn exert the desired toe-load on the rail-foot. MLJ's made of rolled sections have been found to be weak in fatigue strength. They open out in service affecting the toe-load of the Clip. A forged section with increased metal at critical points would provide the right solution.

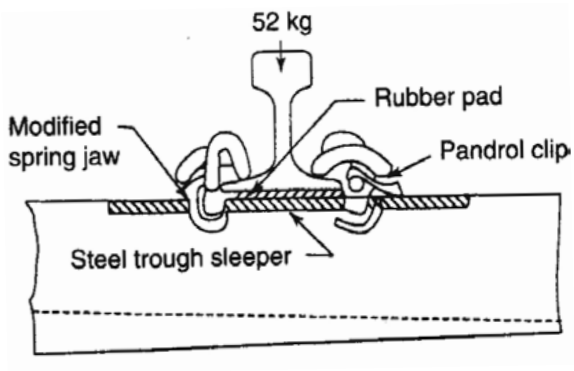

Fig. 5.57: Modified Spring-Jaw for ERC-Clip; right Castle Rock, Braganza Ghat, Karnataka

5.9 TRACK ACCESSORIES FOR SPECIAL LOCATIONS

5.9.1 Hook-Bolt: There are two types of hook-bolts:

1. With straight lip meant for securing sleepers to plate girders.
2. With sloping lip meant for securing sleepers to joists.

In both cases (**Fig. 5.58 and Fig. 5.59**) the hook is an integral part of the bolt. With the help of an arrow head stamped on the top end of the bolt, maintenance staff is able to check the position of the hook on the underside of the sleeper.

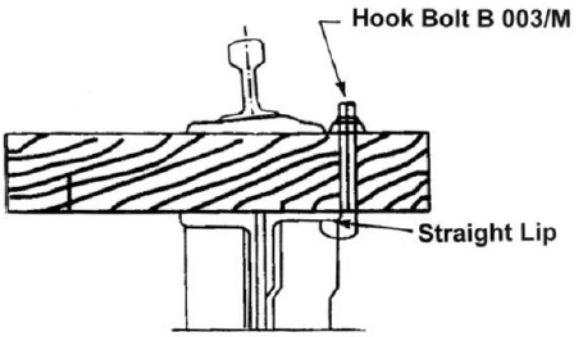

Fig. 5.58: Method of Fastening Wooden Sleepers on Plate Girder Spans

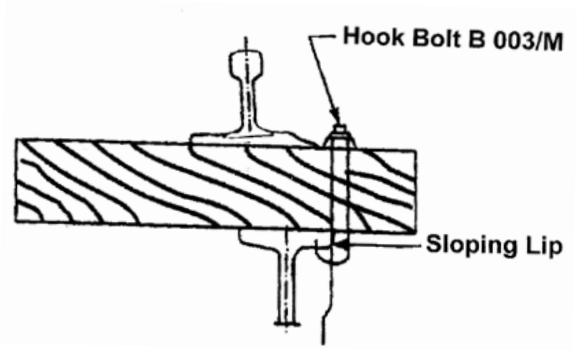

Fig. 5.59: Method of Fastening Wooden Sleepers on Joint Spans

5.9.2 Anti-Creep Rail-Anchors

Creep is the longitudinal sliding movement of the rails. It is resisted by (a) the friction between the rail and the sleeper and (b) the grip of the rail to the sleeper fastening assembly.

When this resistance is insufficient, rail anchors are used. They are secured to the base of the rail and bear against the side of the sleepers towards which the rails is creeping. Their design is such that rail to anchor resistance is much more than sleeper to ballast resistance per rail-seat. The movement of rails vis-à-vis sleeper is therefore completely arrested.

The most widely used anchors are the one-piece spring tensioned friction grip anchors; **Fig. 5.60; Table 5.8:**

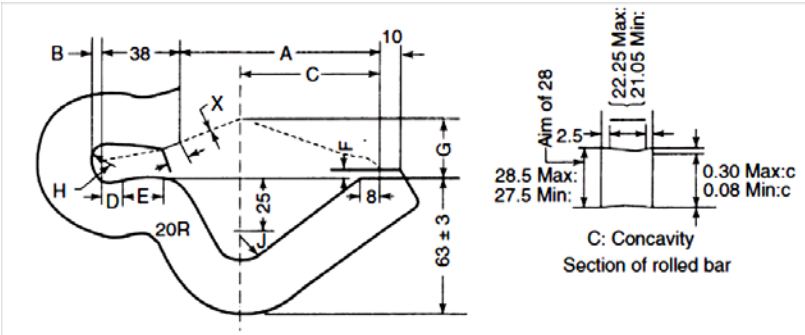

Fig. 5.60: Dimensions of Rail-Anchor

Table 5.8: Table of Dimensions

Rail Section	Drawing Number	Dimensions [mm]								
		A	B	C	D	E	F	G	H	I
52 kg	T-10327	98.00	4.0	68	10	20	$5^{+0}_{-0.8}$	29	9	14
90 R	T-10313	98.53	6.5	68.26	8	22	$4^{+0}_{-0.8}$	20.64	8	14
75 R	T-10314	84.24	5.5	61.12	8	16	$4^{+0}_{-0.8}$	18.65	7	13

The creep-anchors are applied to the rail-foot and clipped on with a spiking or other heavy hammer. Anchors are applied on both sides of a sleeper, when it is necessary to prevent the movement of rails in both directions as in the cases of short welded rails or breathing lengths of long welded rails. This is **termed "box anchoring".**

There can be no hard and fast rule for a precise number of rail anchors to be applied. Important is that the rails should hold against movement. And if not so, additional anchors should be applied.

5.9.3 Spring-Washers; Fig. 5.62 and Fig. 5.63

To ensure that track fastenings do not loosen early, spring-washers are used under the nuts or under the head of plate screws. To make it effective, spring-washers must to have double slope in their deflection graph. While the coil of the springs close down at a relatively low compressive force of about 5 kN, the washers retain their elastic properties even under a force of 40 to 50 kN on account of the bending pitch incorporated in their design. With their use, the fish-bolt nuts do not work loose under high frequency vibrations. Plate screws maintain their hold better when provided with spring-washers.

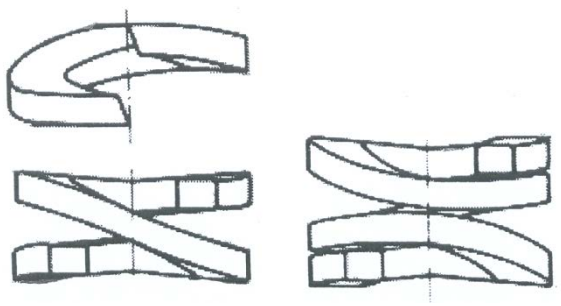

Fig. 5.61: Single, double and triple Spring-Washers of German Federal Railway (DB)

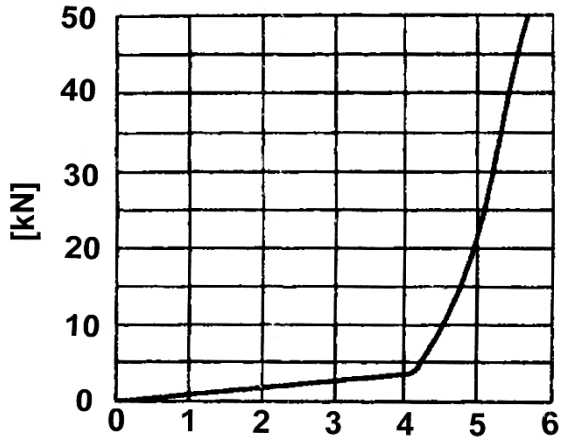

Fig. 5.62: Force-Deflection Diagram; Deflection in [mm]

Based on the German design, two types of spring-washers, viz. single coil (RDSO Drg. No. T-10773) and double coil (RDSO Drg. No. T-1878) have been evolved by RDSO for Indian Railways:

1. Single coil spring-washers are to be used at the following locations:
2. In fish-plated joints.

3. With fittings and fastenings of points and crossings.
4. With plate screws on wooden sleepers.

Double coil spring-washers will be used on 'K'-type indirect fastenings with ribbed bearing-plates (see **Fig. 5.15/5.16** above**)** proposed to be adopted for modern turnout designs; see **ANNEXURE.**

5.10 CHECK-RAILS AND GUARD-RAILS

Check-rails and guard-rails are lengths of rails laid parallel to a track. They are either attached to the track or laid apart at a fixed distance and then fastened to the track.

Check-rails are used in location as follows:

1. On points and crossings at the crossing assembly where they serve the purpose of guiding the wheels through the narrow clearance (flange-way) at the nose.
2. On sharp curves, where they prevent the curving wheels from causing excessive wear of the outer rails and to prevent derailments; **Fig. 5.64 below.**
3. On curved bridge approaches as a positive safeguard against derailment.

Guard-Rails are employed at the under-mentioned as follows:

1. On level-crossings where they help in providing pathway clearance to the running wheels. The gap between the extended portions of the guard-rails beyond the roadway should be filled with ballast or other suitable material to level with the contiguous road surface.
2. On all girder bridges, including pre-stressed concrete girder bridges without deck slab, with open floor.
3. In all major and important ballasted deck bridges as also on such other minor ballasted deck bridges where derailments may cause serious damages.
4. On high banks or deep cuttings where a derailment could produce serious consequences.

In the case of 2., 3. and 4. guard-rails can prevent derailed rolling stocks to leave the rail-road. Check-rails and sometimes guard-rails are held to flat-footed running rails with bolts through distance pieces of cast iron known as check-blocks. The length of the check-block gives the requisite clearance. The foot of the check-rail is usually machined off on one side for clearance; **Fig. 5.63:**

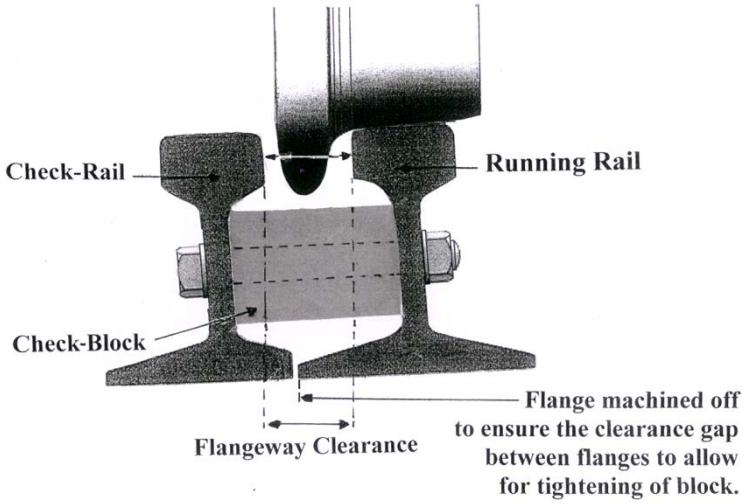

Fig. 5.63: Check-Rail Block
Re-designed by F. Wingler

Fig. 5.64: Curve Check-Rail on Steel-Sleeper with rigid Screw/Bolt Fastening to lower the Risk of Derailments, KK-Line; Pict. by M.S. Rao

In England by tradition tight curves are provided with check-rails. Check-rail and running rail, both are accommodated on the same base or holder-plate with the check-rail block clamped between them, mostly fixed on wooden sleepers and nowadays with several lines on new steel-sleepers. The Swiss Manufacturer for turnouts and rail-fastenings ***SCWIHAG*** developed an innovative arrangement for check-rails applied in UK consisting of a fastening block, where on the gauge side the check-rail and running-rail are assembled by clips, and where on the field side the

rail-foot of the running rail is clamped by the middle part of left-handed Pandrol Clips. This system is also applicable for turnout guard-rails. This guard/check-rail fastening had been assembled by ***Story Rail*** on wooden sleepers in England; **Fig. 5.65:**

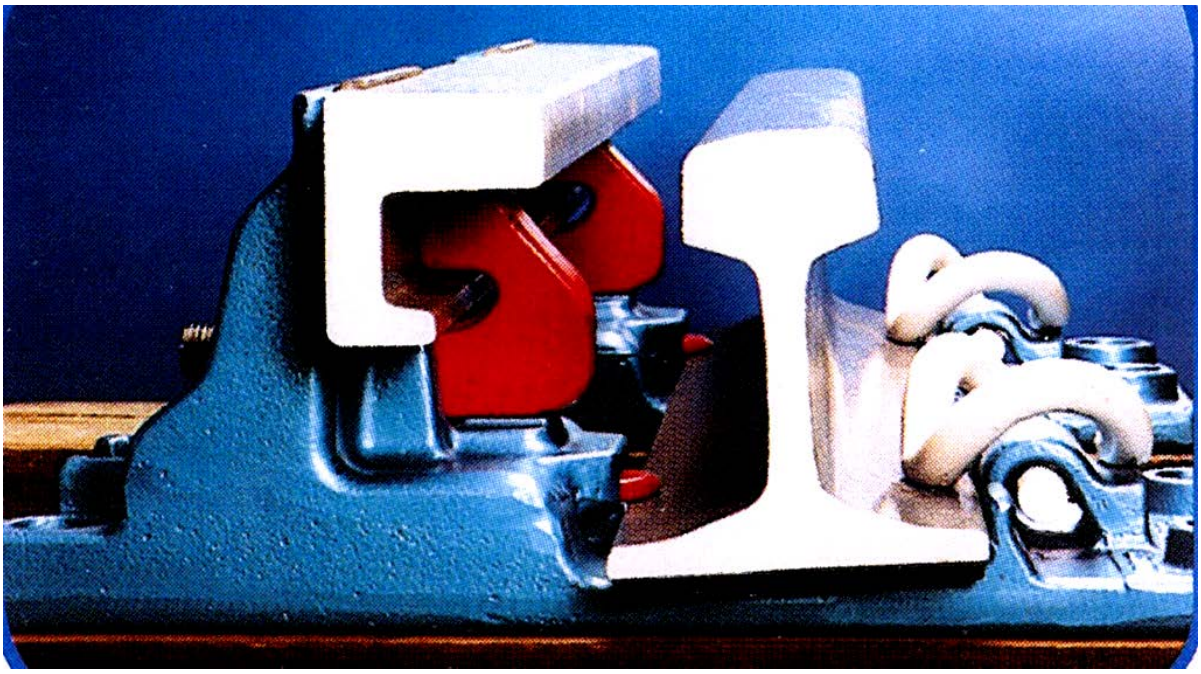

Fig. 5.65: Guard/Check-Rail Assembly on wooden Sleeper with innovative Schwihag Clip-Fastening Block with left-handed Pandrol Clip; Pict.:*Story Rail* England

Guard-rails on bridges in India usually consist of old rails at a distance of 250 mm from each running rail and in the inter rail space. They are fastened to the sleepers independent of the running rails. The top of the guard-rail is kept at the same level as the head of the running rail; if kept lower it should not be more than 25 mm below the running rail. Guard-rails are joined together with fishplates. The two guard-rails converge at each end of the bridge. The ends are bent down to prevent fouling by hanging parts of the rolling stocks; **Fig. 5.66**:

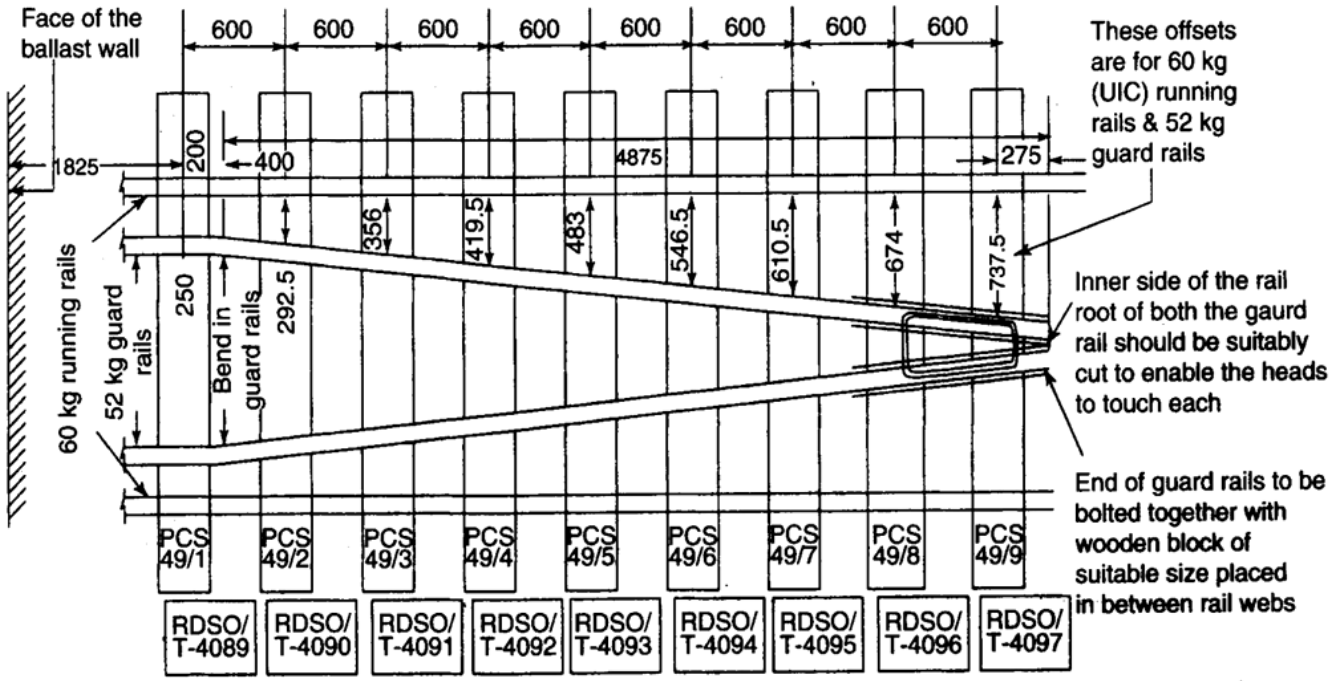

Fig. 5.66: Guard-Rails for Bridges

ANNEXURE

by F.A. Wingler

K-Ribbed Bearing-Plate for indirect Fastening Systems

The **K-Ribbed Bearing-Plate** is one of the most adopted bearing plates for indirect hook-bolt/nut rail fastenings by Railways around the globe on wooden, FFU, composite, steel and concrete sleepers as well on ballast-less or slab tracks. On the canted Base Bearing-Plate there are two Ribs with a “Swallow-Tail” opening for the Hook-Bolt:

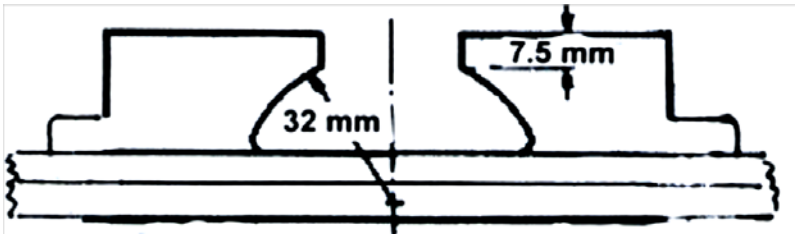

Pict. by Vossloh

With the Vossloh tension clamp SKL12 it is nowadays the favoured elastic rail fastening for turnouts on concrete sleepers as well on ballast-less or slab tracks in Germany. The Clamping-Force (Toe-Load) can be adjusted by the torque, which should be in the range between 180 and 200 Nm. The K Ribbed-Fastening allows sandwich structures with a thick vulcanised rubber damping-pad between two cast iron-plates with the possibility of vertical and horizontal adjustments:

ThyssenKrupp ECF K Ribbed Bearing-Plates for Steel-Sleepers and Ballast-less Track Structures

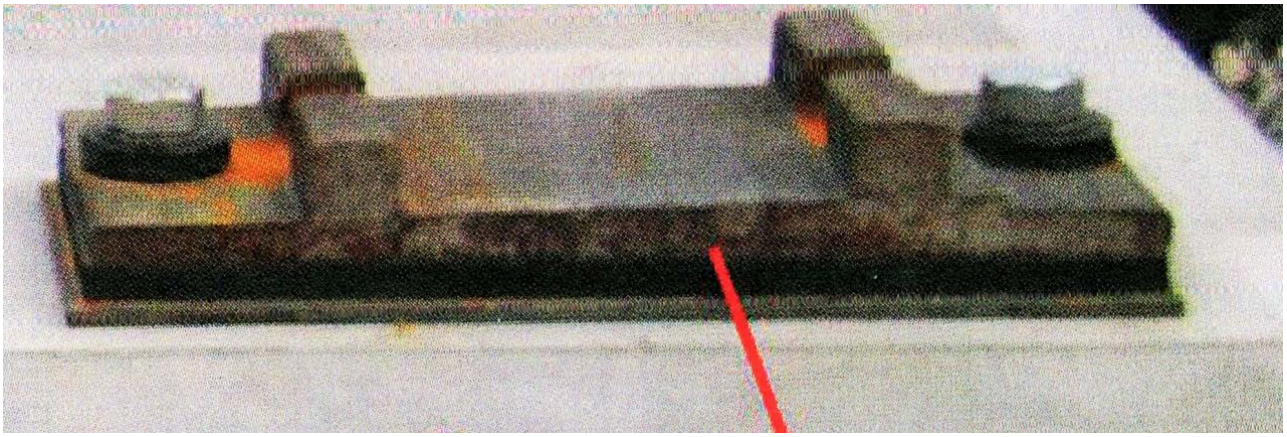

ThyssenKrupp ECF K Ribbed Bearing-Plate for Steel-Sleepers and Ballast-less Track Structures

Recently the tracks of the Cologne, Germany, Hohenzollern Railway Bridge had been rehabilitated with ThyssenKrupp Steel Sleepers and ECF Ribbed Bearing-Plate Fastening:

Cologne Hohenzollern Rhine Bridge rehabilitated with ThyssenKrupp Steel-Sleepers and EFC Ribbed Bearing-Plates

In the latest reprint and extended edition of ***WORK PROCEDURES FOR PERMANENT WAY MAINTENANCE*** from L. Marx and D. Moßmann, BFV Bahn Fachverlag, ISBN 978—3-943214-03-1 the importance of the K-Type Ribbed Plate for indirect elastic fastenings on ballast-less turnouts is delineated by the following pictures and graphs:

ECF Ribbed Bearing-Plates for Turnout on M. BÖGLE Slab-Track

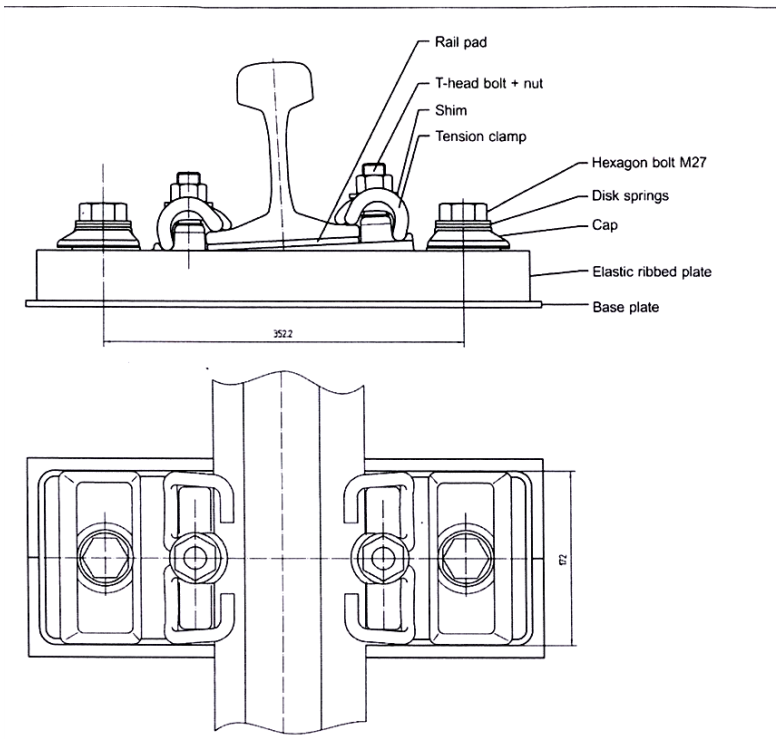

Elastic Ribbed K-Plate Support with Vossloh Tension Clamp SKL12; fully vulcanised System for Turnouts BWG

The support point stiffness is approximately 17.5 kN/mm. This permits an average rail-deflection of approximately 2 mm. The turnout support points can be regulated horizontally by -12 to +12 mm and vertically by -4 to +26 mm in order to compensate vertical and horizontal errors. It is now the standard support system for turnouts on ballast-less tracks in Germany.

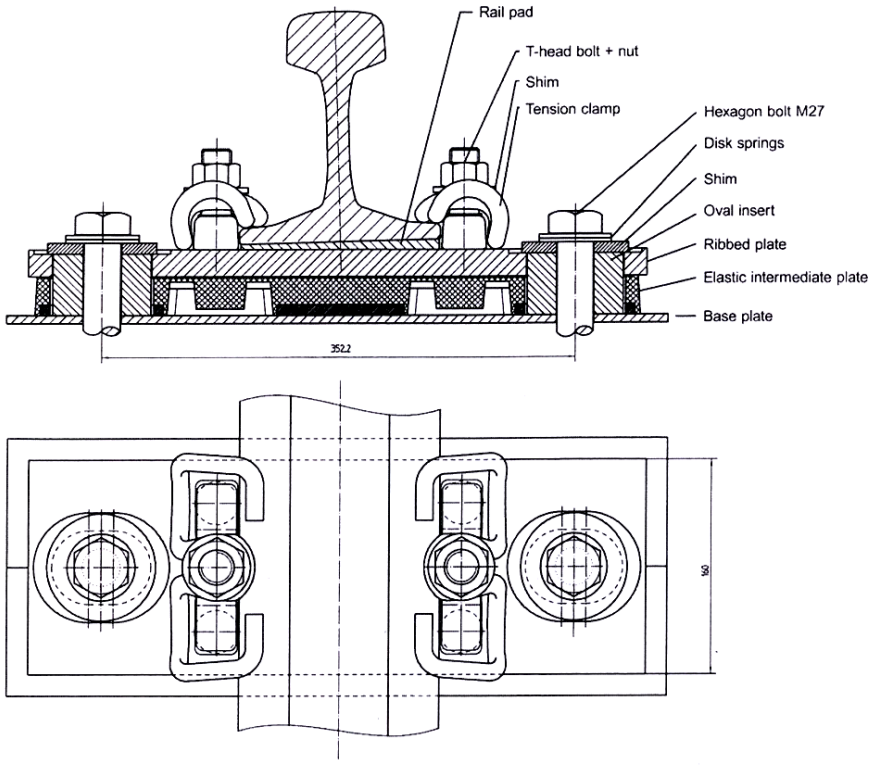

Elastic Ribbed K-Plate Support with Vossloh Tension Clamp SKL12; Pad System for Turnouts, BWG

This is a simplified version of the vulcanised system, above, but guarantees similar fundamental characteristics, properties and functions mentioned above. The turnout support points can be regulated horizontally by -12 to +12 mm and vertically by -4 to +24 mm in order to compensate vertical and horizontal errors.

The indirect elastic rail-fastening with K Ribbed Bearing-Plates and SKL 12 Tension Clamp might gain importance in India for the elastic fastenings of turnouts on the proposed new dedicated HIGH-SPEED TRACKS. This elastic fastening system has already arrived on Indian Metro Ballast-less Tracks:

Bangalore Metro
Pict.: Vol.-II of NATIONAL TECHNICAL SEMINAR of IPWE; January 11th&12th, 2013, Chennai

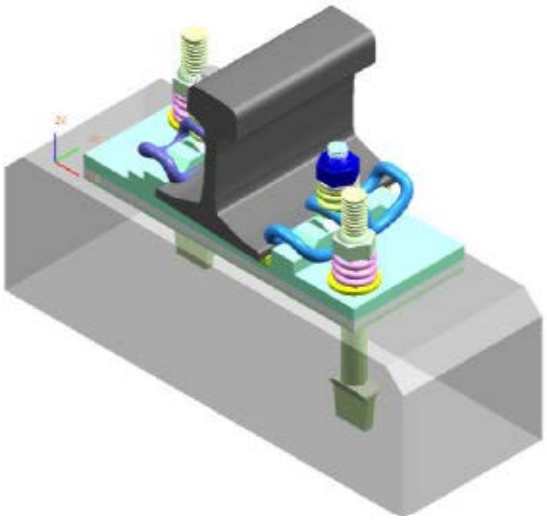

Delhi Metro

T-Head/K-Bolts

Schwihag Two-Tire indirect Fastening with K Ribbed-Plate and SKL Tension Clamp for Ballast-less Track Structures

Post Scriptum:

Pandrol Fast-Clip FD 1408 a *"fit and forget"* Rail-Fastening for Steel-Sleepers

Close-up of FD 1408 Fast-Clip Assembly with Insulator-Liner on Steel-Sleepers in Sri Lanka - a *"fit and forget"* Rail-Fastening

Sri Lanka Railways has laid 50 000 Indian Trough Steel-Sleepers from Rahee Industries with Pandrol FD 1408 Fast-Clips on its grueling Upcountry Line between Nawalapitiya and the Pattipola Summit. Besides the track shortcomings with soft formation, poor drainage and poor ballasting or even missing ballast, the FD 1408 Fast-Clips with Liners performed very well. The author inspected 8 km track by foot-patrol between Rozella and Hatton, and he found only two clips missing and one holder damaged, although on sections the steel-sleepers under train-load are *"dancing"* in wet mud without any ballast; see picture on next page.

The insulating Liners allow adjusting the gauge-slack in curves.

On 8 km of SLR gruelling Upcountry Track only one Fast-Clip missing although Steel-Sleepers are *"dancing"* in Mud.

New laid Indian Steel-Sleepers with Pandrol Fast Clips dancing in Mud, Sri Lanka: Rozella-Hatton